Approvers: Gul, Taimur 05/10/2016

E0-9522-B

REVISIONS	
JAS 3/8/85	1
ADDED NOTES & UPDATED DWG. C.W. 2-19-85	
9/10/86	2
CHG'D. NOTES & TITLE C.W. 4-11-86	
10/13/88	3
CHG'D. NOTE 6 J.L. 10-7-88	
ENG: A. MILLER	4
SPEC. REVIEWED. NO CHANGES MADE. ISSUE FOR RECORD DES: N. POLYDOROU 4/20/16	

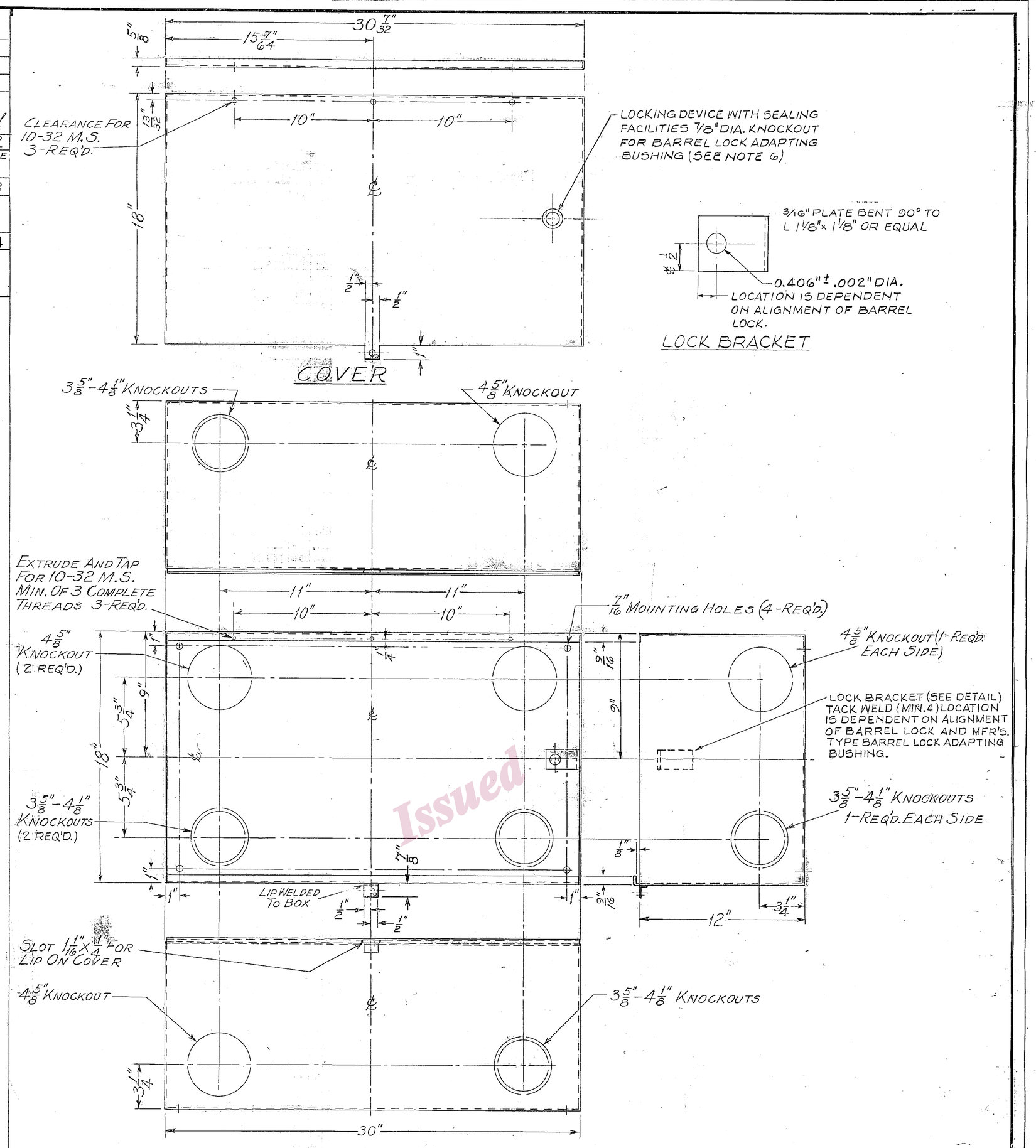

Issued

NOTES:

1. THE SERVICE END BOX COVER SHALL BE OF NO. 14 U.S. STANDARD GAUGE GALVANIZED SHEET STEEL AND HAVE A FINISH OF BAKED GRAY ENAMEL.
2. KNOCKOUT DIMENSIONS INDICATE ACTUAL DIAMETER OF KNOCKOUT AND NOT SIZE OF CONDUIT.
3. SEALING FACILITIES SHALL ACCOMMODATE STANDARD SEALS AND PADLOCK WITH 5/16 DIAMETER HASP.
4. FOR OUTDOOR TYPE A SERVICE END BOX AND COVER SHALL BE CONSTRUCTED AND DESIGNATED "RAINTIGHT."
5. A NAMEPLATE SHALL BE PLACED ON THE OUTSIDE OF THE COVER AND CONTAIN THE MANUFACTURER'S NAME AND CATALOG NUMBER.
6. FOR INDOOR ENCLOSURE, USE HIGHFIELD LOCK RECEPTACLE WITH SEAL FERRULE CATALOG NO. 93389000, HIGHFIELD MFG. CO., BRIDGEPORT, CONN. OR BROOKS LOCK GUARD, CATALOG NO. 86505, E.J. BROOKS CO., NEWARK, NEW JERSEY. OR INNER-TITE LOCK HEAD PROTECTOR WITH SEALING FERRULE CATALOG NO. E-0090A, INNER-TITE CORP. SPRINGFIELD, NEW JERSEY. FOR OUTDOOR "RAINTIGHT" ENCLOSURES, USE HIGHFIELD LOCK RECEPTACLE WITH SEAL FERRULE AND GASKETS CATALOG NO. 9338997 OR BROOKS LOCK GUARD CATALOG NO. 865150.
7. THE EQUIPMENT SHALL MEET THE REQUIREMENTS OF THE NATIONAL BOARD OF FIRE UNDERWRITERS, THE DEPT. OF BUILDINGS OF THE CITY OF NEW YORK AND UNDERWRITERS LABORATORIES, INC. PUB. NO. 50.
8. SAMPLES OF THE EQUIPMENT SHALL BE SUBMITTED TO THE DISTRIBUTION INSTRUMENTATION ENGINEER FOR APPROVAL.

FIELD MANUAL # 4 SECTION NO. 6
FIELD MANUAN #16 SECTION NO. 3

SERVICE END BOX FOR INDOOR OR OUTDOOR LOCATIONS 30" X 18" X 12"

CONSOLIDATED EDISON COMPANY OF N. Y., INC.
ELECTRICAL ENGINEERING DEPT.

DATE MAR. 8, 1960. LAST REV. 4-20-16 | MES. NO. 484 | REV. 4

TRIM

NO.	DATE	REVISIONS	APPROVED

FOR APPROVAL

DIV.	SIGNATURE	DATE

E0-9522-B

DRAWN BY J. Schnucker 3-8-60 | CHECKED BY 3-11-60 | TRACED BY | SCALE 3"=1'-0" | APPROVED C.V. Morey 3/22/60 METER ENGINEER