E0-9522-B

REVISIONS	
gas 3/8/85	1
ADDED NOTES & UPDATED DWG. C.W. 2-19-85	
gas 9/10/86	2
CHG'D NOTES & TITLE C.W 4-11-86	
gas 10/13/88	3
CHG'D NOTE 6 J.L 10-7-88	
A.M 04/20/2016	4
SPEC. REVIEWED. NO CHANGES MADE ISSUE FOR RECORD DES: N. POLYDOROU 04-20-2016	
A.M 02/28/2024	5
THE DRAWING WAS REVIEWED, CLEANED UP AND UPDATED NOTES A.M 02-28-2024	

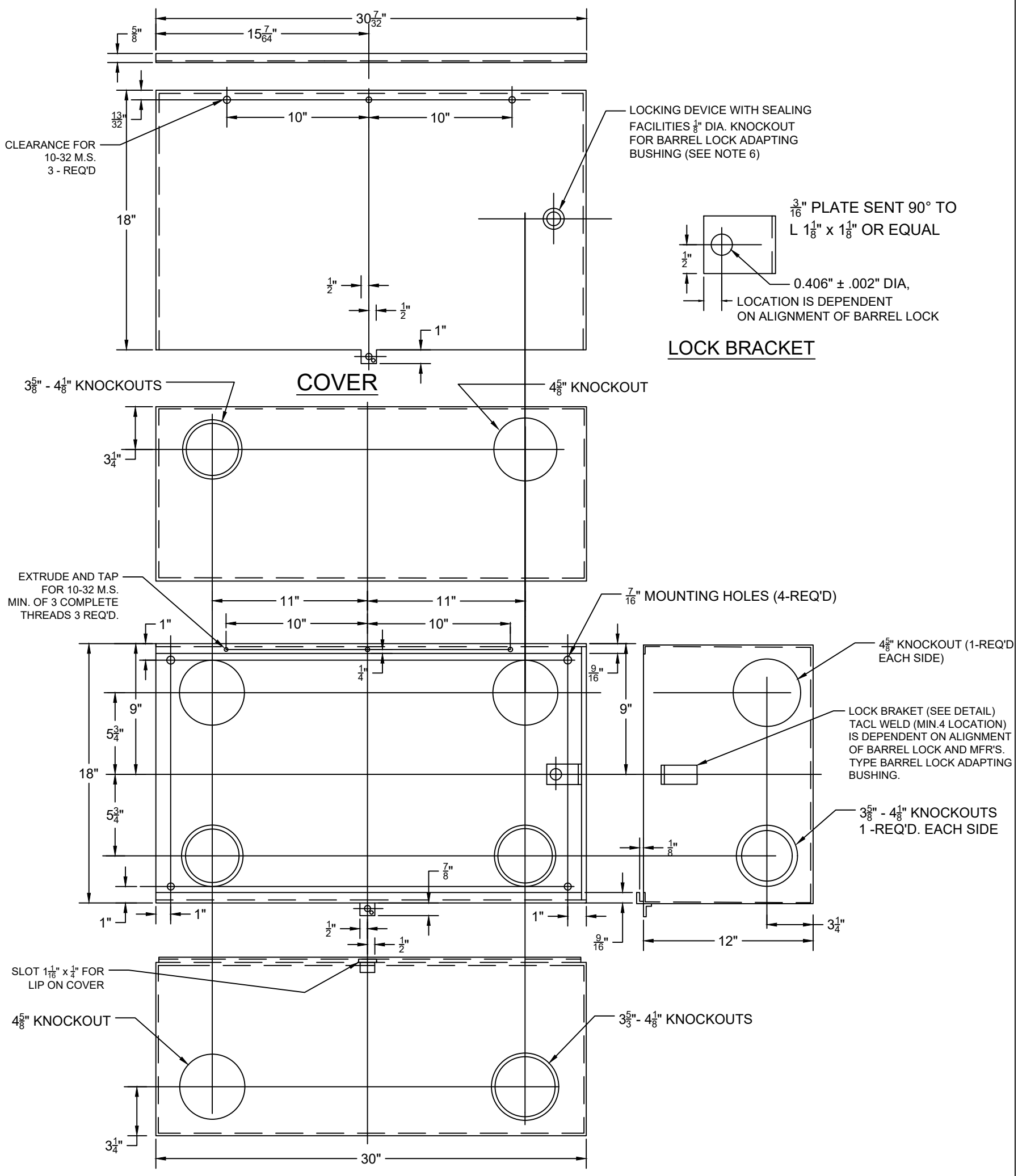

NOTES:

1. THE SERVICE END BOX COVER SHALL BE OF NO. 14 U.S. STANDARD GAUGE GALVANIZED SHEET STEEL AND HAVE A FINISH OF BAKED GRAY ENAMEL.
2. KNOCKOUT DIMENSIONS INDICATE ACTUAL DIAMETER OF KNOCKOUT AND NOT SIZE OF CONDUIT.
3. SEALING FACILITIES SHALL ACCOMMODATE STANDARD SEALS AND PADLOCK WITH 5/16 DIAMETER HASP.
4. FOR OUTDOOR TYPE A SERVICE END BOX AND COVER SHALL BE CONSTRUCTED AND DESIGNATED "RAINTIGHT."
5. A NAMEPLATE SHALL BE PLACES ON THE OUTSIDE OF THE COVER AND CONTAIN THE MANUFACTURER'S NAME AND CATALOG NUMBER.
6. FOR INDOOR ENCLOSURE, USE HIGHFIELS LOCK RECEPTACLE WITH SEAL FERRULE CATALOG NO. 93389000, HIGHFIELD MRG.CO. BRIDGEPORT, CONN OR BROOKS LOCKHEAD PROTECTOR WITH SEALING FERRULE CATALOG NO.E-0090A, INNER-TITE SPRINGFIELD, NEW JERSEY. FOR OUTDOOR "RAINTIGHT" ENCLOSURES, USE HIGHFIELD LOCK RECEPTACLE WITH SEAL FERRULE AND GASKETS CATALOG NO. 9338997 OR BROOKS LOCK GUARD CATALOG NO.865150.
7. THE EQUIPMENT SHALL MEET THE REQUIREMENTS OF THE DEPT. OF BUILDINGS OF THE CITY OF NEW YORK AND UNDERWRITERS LABORATORIES INC. PUB. NO.50.
8. SAMPLES OF THE EQUIPMENT SHALL BE SUBMITTED TO THE DISTRIBUTION INSTRUMNETATION ENGINEER FOR APPROVAL.

FIELD MANUAL #4 SECTION NO.6
FIELD MANDAN #16 SECTION NO. 3

SERVICE END BOX FOR INDOOR OR OUTDOOR LOCATIONS 30" x 18" x 12"

CONSOLIDATED EDISION COMPANY OF N.Y., INC.
ELECTRICAL ENGINEERING DEPT.

DATE MAR. 8,1960.
LAST REV. 02-28-2024

MES. NO. 484-B REV. 5

No.	DATE	REVISIONS	APPROVED

FOR APPROVAL

DIV.	SIGNATURE	DATE

E0-9522-B

DRAWN BY DATE CHECKED BY DATE
TRACED BY DATE SCALE
APPROVED DATE
METER ENGINEER DATE