EO-15406-A

REVISIONS

GAS 3/8/85	1
ADDED NOTES & UPDATED DWG C.W. 2-14-85	
GAD 9/23/88	2
CHG'S NOTE 4 JL. 9-20-88	
A.M 04/20/2016	3
REVIEWED DRAWING NO CHANGES MADE ISSUE FOR RECORD DES: N. POLYDOROU 05-20-2016	
A.M 02/28/2024	4
THE DRAWING WAS REVIEWED, CLEANED UP AND UPDATED NOTES A.M 02-28-2024	

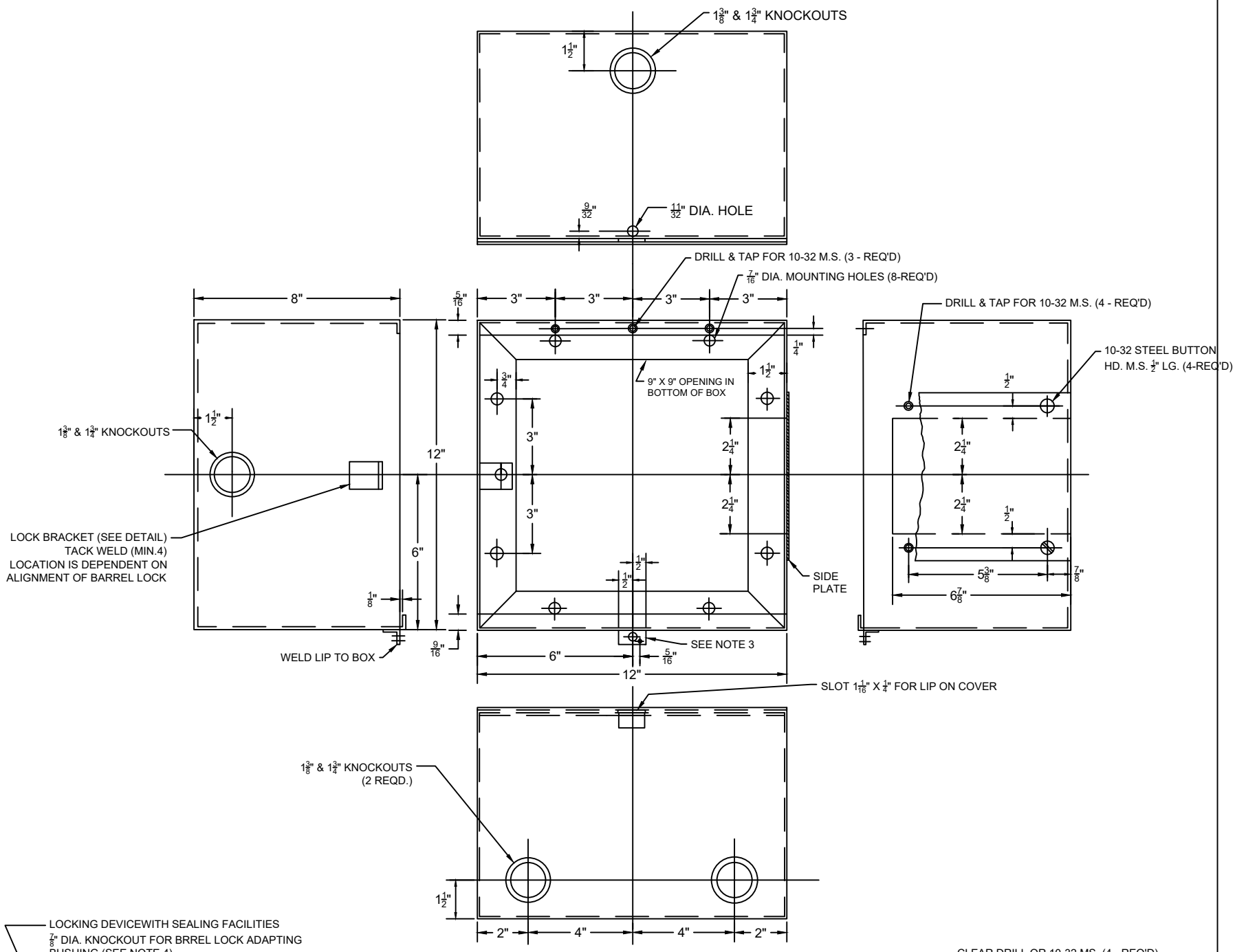

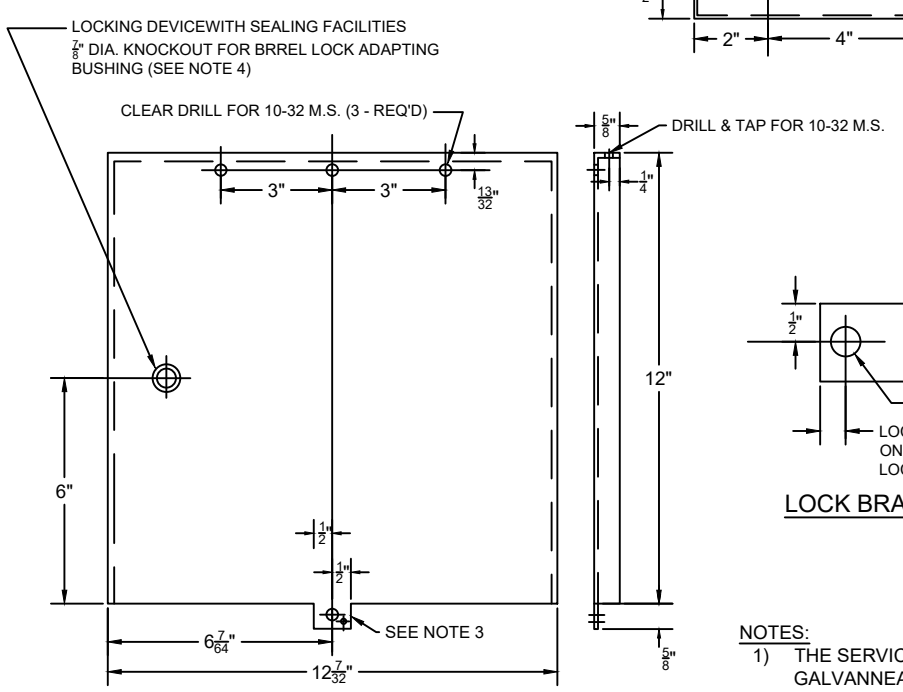

COVER

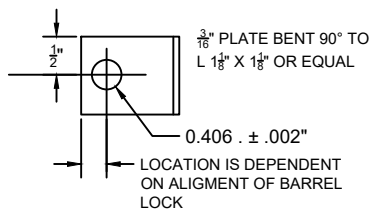

LOCK BRACKET

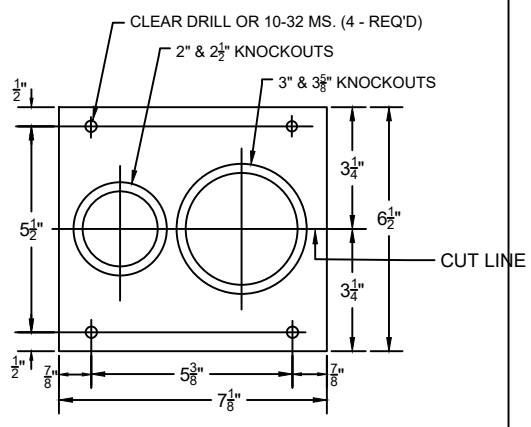

SIDE PLATE
(2 PIECES)

NOTES:

1) THE SERVICE END BOX, COVER AND SIDE PLATE SHALL BE MADE OF NO. 14 U.S. GA. GALVANNEALED STEEL AND HAVE A FINISH OF BAKED GRAY ENAMEL.
2) KNOCKOUT DIMENSIONS INDICATE ACTUAL DIAMETER OF KNOCKOUT AND NOT SIZE OF CONDUIT NO BUSHING OR LOCKNUT WILL BE INSTALLED ON CONDUIT ENTERING TWO PIECE SIDE PLATE.
3) SEALING FACILITIES SHALL ACCOMMODATE STANDARD SEALS AND PADLOCK WITH 5/16" DIA. HASP.
4) HIGHFIELD LOCK RECEPTACLE WITH SEAL FERRULE CAT. 93389000 HIGHFIELD MFG. CO,. BRIDGEPORT. CONN. OR BROOKS. BARREL LOCK GUARD NO. 86505. EJ BROOKS CO. NEWARK, NEW JERSEY. OR INNER-TITE LOCK HEAD PROTECTOR WITH SEALING FERRULE CATALOG NO. E-0090A, INNER-TITE CORP. SPRINGFIELD NEW JERSEY.
5) SAMPLES OF THE EQUIPMENT SHALL BE SUBMITTED TO THE DISTRIBUTION INSTRUMENTION ENGINEER FOR APPROVAL.
6) THE EQUIPMENT SHALL MEET THE REQUIREMENTS OF THE DEPT. OF BUILDINGS OF THE CITY OF NEW YORK AND UNDERWRITERS LABORATORIES INC. PUB. NO.50.

THIS DWG. SUPERSEDES DWG. U-A-27048

SERVICE END BOX FOR INDOOR CO-OCCUPIED SERVICE PIPE 12" X 12" X 8".

CONSOLIDATED EDITION COMPANY OF N.Y., INC.
ELECTRICAL ENGINEERING DEPT.

DATE 1-25-74
LAST REV. 02-28-2024
MES No. 400-A
REV. 4

FIELD MANUAL #16 SECTION 3
FIELD MANUAL #4 SECTION 6

No.	DATE	REVISIONS	APPROVED

FOR APPROVAL

DIV.	SIGNATURE	DATE

DRAWN BY DATE | CHECKED BY DATE | TRACED BY DATE | SCALE | APPROVED DATE | METER ENGINEER DATE

EO-15406-A