TRANSMISSION

TRIM LINE

EO-16890-B

J.S. 03/12/90
G.WATTS 03/12/90

REVISIONS

V.FERGUSON 5/12/99	1
CHANGED NOTE 7 AND NOTE IN DIAGRAM. G.D. 5/12/99	
V.FERGUSON 7/3/03	2
ADDED NOTE 13. G.D. 7/3/03	
R. LEE 4/30/2018	3
ADDED NOTE 14 AND CANGED NOTES IN DIAGRAM L. LEGRAND 4/30/2018	

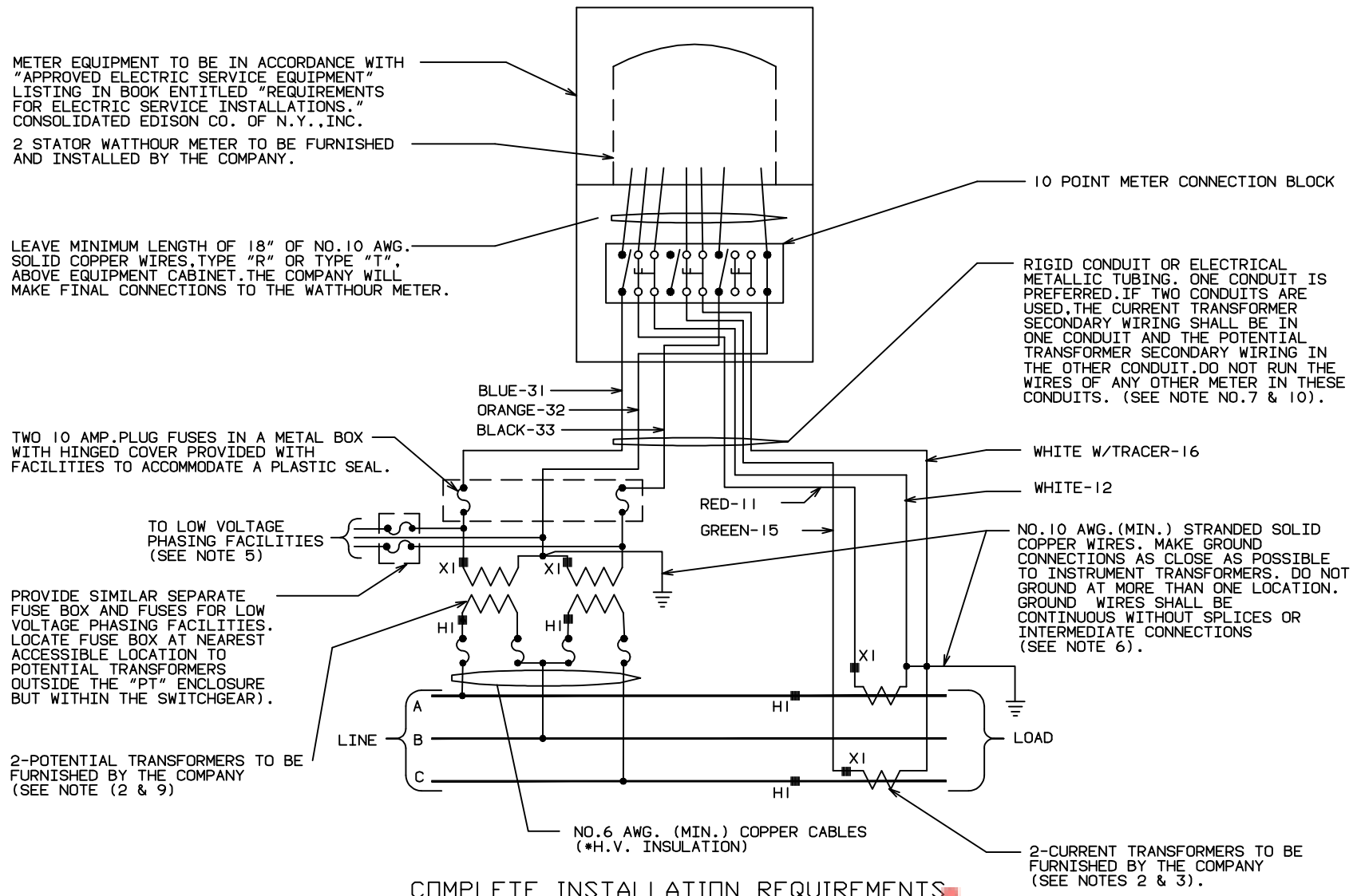

COMPLETE INSTALLATION REQUIREMENTS SHALL BE IN ACCORDANCE WITH MES 350.

Approved

NOTES:

1. THE CUSTOMER SHALL FURNISH LABOR AND MATERIAL FOR COMPLETE INSTALLATION,EXCEPT AS OTHERWISE NOTED.
2. CUSTOMERS INSTRUMENTS OR PROTECTIVE EQUIPMENT SHALL NOT BE CONNECTED TO REVENUE METERING CURRENT OR POTENTIAL TRANSFORMERS. CUSTOMER SHALL PROVIDE SEPARATE INSTRUMENT TRANSFORMERS FOR HIS EQUIPMENT WHICH MUST BE CONNECTED ON THE LOAD SIDE OF THE COMPANY REVENUE METERING TRANSFORMERS.
3. CURRENT TRANSFORMER SECONDARY TERMINALS BRIDGED BY A SHORT CIRCUITING WIRE SHALL NOT BE OPEN CIRCUITED BY THE CONTRACTOR. COMPANY WILL REMOVE SHORT CIRCUITING WIRE AND TAG WHEN MAKING FINAL CONNECTIONS TO THE WATTHOUR METER AND CURRENT TRANSFORMERS.
4. WIRING TO CURRENT AND POTENTIAL TRANSFORMER SECONDARIES SHALL BE CUT AND FORMED TO PROPER LENGTH AND IDENTIFIED. COMPANY WILL MAKE FINAL CONNECTIONS TO INSTRUMENT TRANSFORMER SECONDARY TERMINALS. CONNECTIONS TO THE BOTTOM OF THE METER CONNECTION BLOCK SHALL BE MADE BY THE CUSTOMER.
5. LOW VOLTAGE PHASING FACILITIES ARE REQUIRED WHERE SERVICE CONSISTS OF MORE THAN ONE FEEDER,13.2 KV AND ABOVE (REFER TO SPEC.NO.EO-3299-D).
6. INSTRUMENT TRANSFORMER CASES AND METER CASES,IF MOUNTED ON INSULATED STRUCTURES,SHALL BE GROUNDED SEPARATE FROM SECONDARY WIRING GROUNDS,USING NO.6 AWG.(MIN.) COPPER FOR TRANSFORMER CASES,AND NO.10 AWG.(MIN.) COPPER FOR METER CASES.
7. CABLE SHALL BE COLOR CODED 1-7 CONDUCTOR COPPER NO.9 AWG.STRANDED (19/22) TYPE"R" OR "T", OR 7-1 COLOR CODED CONDUCTOR COPPER NO.10 AWG.SOLID TYPE "R" OR "T". USE TYPE "RW" OR "TW" CABLE IN WET OR UNDERGROUND INSTALLATIONS.
8. ALL WIRING SHALL BE CONTINUOUS WITHOUT SPLICES OR INTERMEDIATE TERMINAL POINTS AS STATED IN MES 350. WIRING RING LUGS SHALL BE USED TO CONNECT STRANDED WIRES TO METER CONNECTION BLOCK. WIRING THROUGH PARTITIONS SHALL BE INSTALLED IN CONDUIT NIPPLES FITTED WITH LOCKNUTS AND BUSHINGS OR OTHER EQUIVALENT MEANS FOR PROTECTION.
9. PRIMARY FUSED POTENTIAL TRANSFORMERS ARE ONLY REQUIRED FOR 13.2 KV SERVICE.
10. WHERE IT IS IMPRACTICAL TO USE METAL CONDUIT WITHIN THE SWITCHGEAR,THE SECONDARY WIRING SHALL BE PROPERLY SUPPORTED WITH ADEQUATE CLEARANCE FROM HIGH TENSION BUSSES AND EQUIPMENT, AND BE PROTECTED BY USE OF GREENLEE CONDUIT THAT IS PROPERLY DRESSED ALONG ITS RUN.
11. "CT" AND "PT" SECONDARY WIRING SHALL NOT PASS THROUGH THE PHASING FACILITY BOX OR OTHER NON COMPANY FUSE BOXES.
12. METERING COMPARTMENTS WITH SWING DOORS OR PANELS MUST HAVE FLEXIABLE BRAIDED BOND WIRE OR CABLE, NOT SMALLER THAN NO.4 AWG COPPER INSTALLED ACROSS THE HINGE TO ASSURE A SATISFACTORILY GROUNDED PANEL AS PER MES 350.
13. PT SHIELD, PART #20119 AVAILABLE FROM MAINTENANCE SERVICES, VAN NEST YARD, FOR USE AS INSULATING BARRIER AND ANIMAL GUARD.
14. **NO A-BASE EQUIPMENT SHALL BE ISSUED FOR NEW LOW TENSION INSTALLATIONS. THIS SPECIFICATION IS FOR REFERENCE ONLY.**

LEGEND:

* POTENTIAL TRANSFORMER PRIMARY WIRING SHALL BE NO.6 AWG.(MIN) COPPER CABLES INSULATED FOR LINE TO LINE VOLTAGE.

■ POLARITY MARKINGS ON CURRENT AND POTENTIAL TRANSFORMERS.

REFERENCE SPECS:

TEN POLE CONNECTION BLOCK — — — — — — — — MES 200
HIGH TENSION METERING INSTALLATIONS — — — — MES 350
WIRING DIAG. FOR METERING 27 & 33KV 3 PHASE 3 WIRE — — — — — — — — — — — — — — MES 273B
INSULATING & TAPING OF ELECTRICAL CONNECTIONS — E.I.3002

FIELD MANUALS
NO.4: SERVICE INSTL.
SECT.6: METER INSTL.
NO.16: SERV.INSP.& CNTRL.
SECT.3: ELECT.METERING.

WIRING DIAGRAM FOR METERING 13KV, 3 PHASE, 3 WIRE HIGH TENSION SERVICE

CONSOLIDATED EDISON COMPANY OF N. Y. INC.
DISTRIBUTION ENGINEERING DEPARTMENT

DATE 03/10/90
LAST REV. 4/30/2018
SPEC. NO. MES 273 AREV. 3

COMPUTER GENERATED DRAWING NOT TO BE HAND REVISED

FOR APPROVAL	DIV	SIGNATURE	DATE

EO-16890-B REV.

DRAWN BY DATE W.J.TUBMAN 8/23/89
CHECKED BY DATE R.M. 03/15/90
TRACED BY DATE
SCALE NONE
APPROVED JAMES T.WEBB 03/16/90
CHIEF DESIGN ENGINEER DATE H.C.MAR 03/15/90
DIST.INSTRUMENTATION ENGR. DATE