J-08891-03

REVISIONS

R. GROGAN	1

CHG'D. SPEC G-8167 TO G-8101 AND UPDATED DWG. C.W. 3/5/97

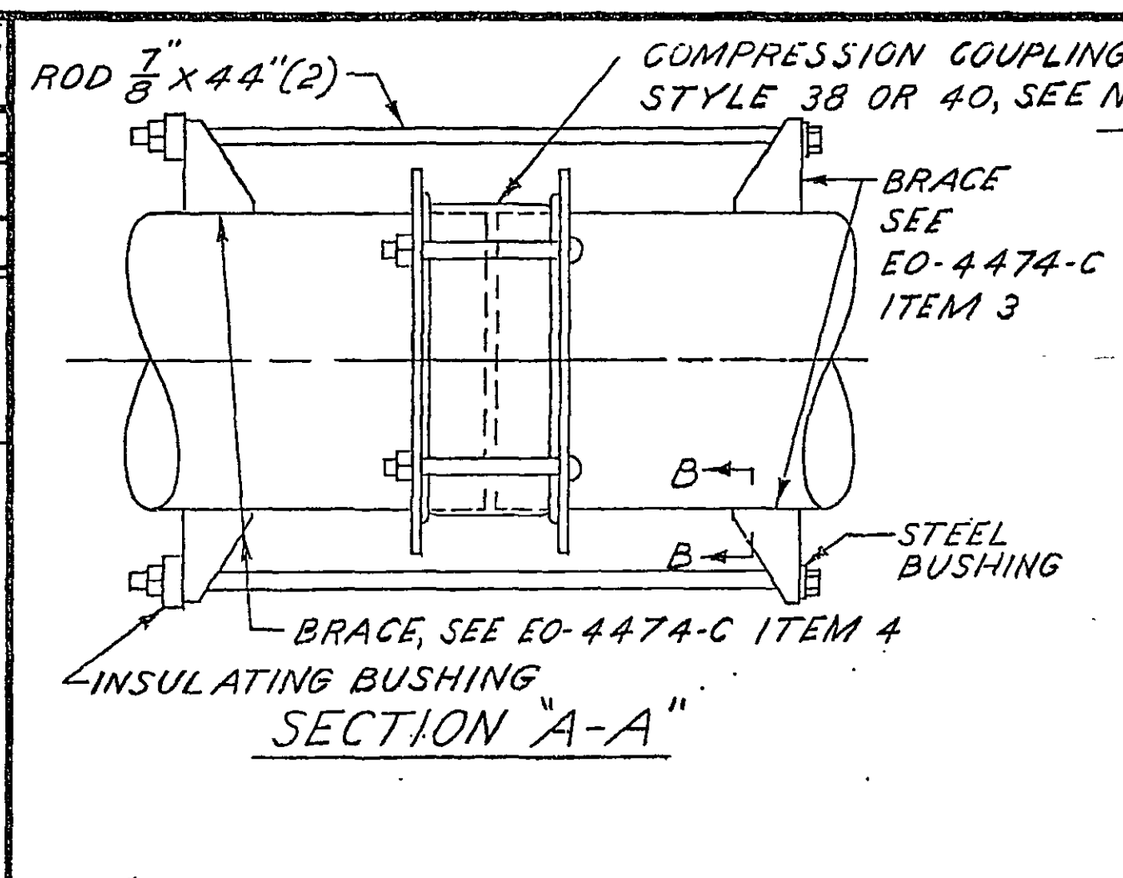

SECTION "A-A"

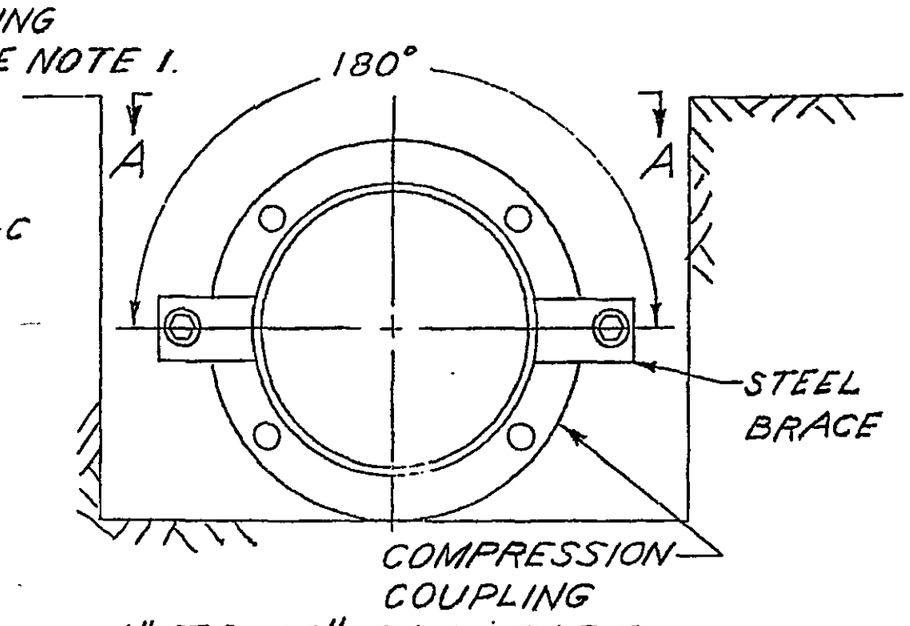

4" TO 12" DIA. PIPE INSTALLATION IN TRENCH

SECTION "B-B"
FOR 4" DIA. PIPE

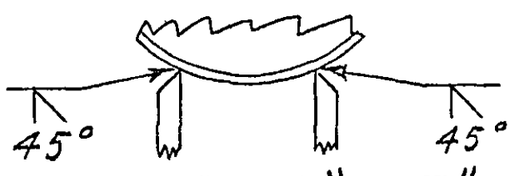

SECTION "B-B"
FOR PIPE DIA. FROM 5" TO 12"

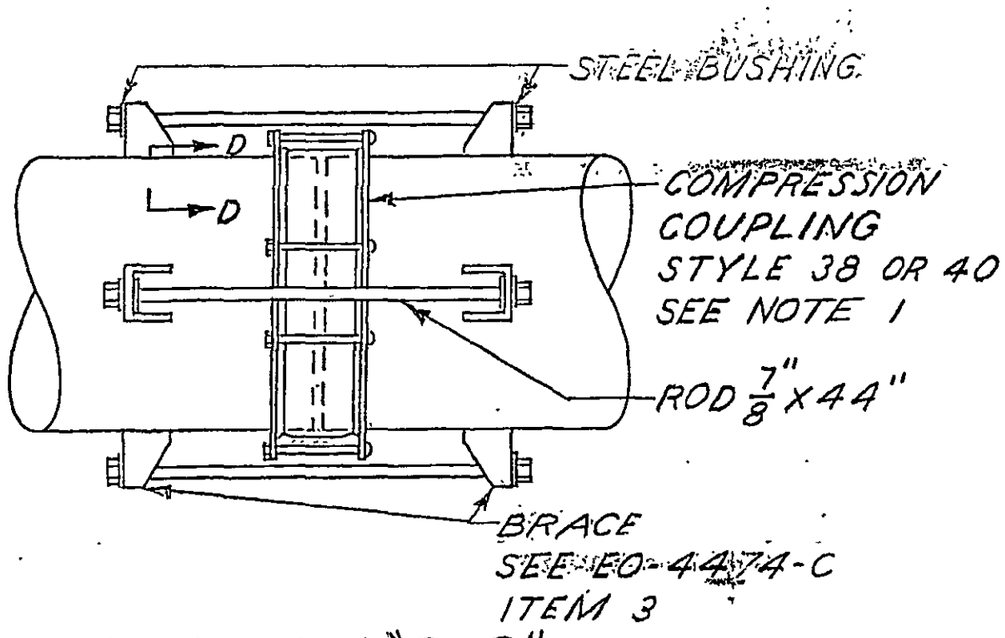

SECTION "C-C"

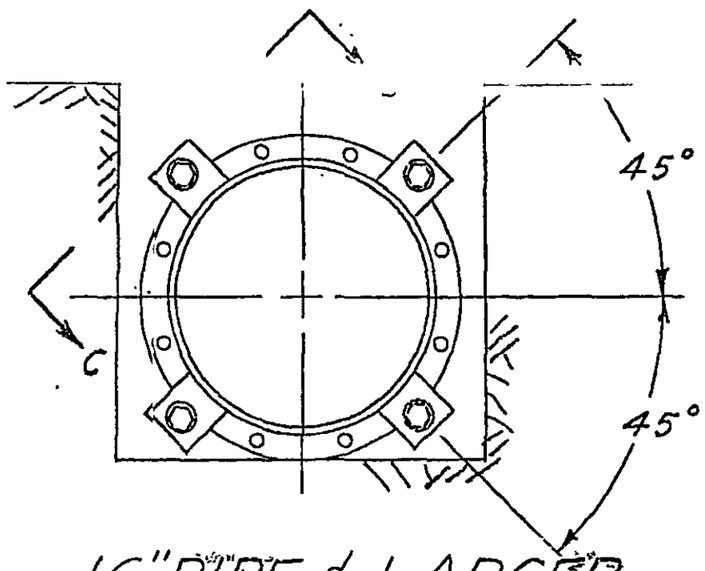

16" PIPE & LARGER INSTALLATION IN TRENCH

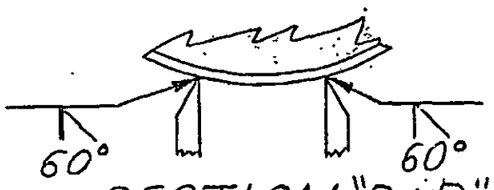

SECTION "D-D"
FOR PIPE DIA. 16" AND LARGER

STOCK NO. 003-8554

KIT INCLUDES:
(1) ROD WITH NUT
(1) BRACE WITH INSULATING BUSHING
(1) BRACE WITH STEEL BUSHING

NO. KITS REQ'D:
(2) KITS REQ'D. FOR 4" TO 12" PIPE.
(4) KITS REQ'D. FOR 16" AND LARGER PIPE.

NOTES:

1. BOND COUPLING FOR CONDUCTIVE INSTALLATIONS.
2. WELDS SHALL BE IN ACCORDANCE WITH CON EDISON SPEC. G-1064.
3. COAT PIPE, COUPLING, BRACE AND RODS IN ACCORDANCE WITH SPEC. G-8101.
4. REINFORCEMENT SHALL BE APPLIED TO A COUPLING AS REQUIRED IN SPEC. G-8153
5. POSI-HOLD COUPLINGS SHALL NOT BE REINFORCED.
6. GASKETS SHALL BE REMOVED FROM COMPRESSION END CAPS DURING THE WELDING OF BRACES ON THE CAPS BODY.

THIS DRAWING IS PART OF SPEC. G-8153

REINFORCEMENT FOR CONDUCTIVE AND INSULATING COMPRESSION COUPLINGS FOR 4" AND LARGER DIA. MAINS

GAS OPERATIONS CONSTRUCTION STANDARDS VOLUME NO. 2

CONSOLIDATED EDISON COMPANY OF N.Y., INC.
GAS ENGINEERING DEPARTMENT

DATE 3-16-89 LAST REV. 3-5-97 | DWG. NO. EO-16880-C | REV. 1

FOR APPROVAL	DIV.	SIGNATURE	DATE
	GAS	W.B. Fenner	7/31/89
		SB 3/28/89	

DRAWN BY J.L. DATE 3-16-89 | CHECKED BY DATE | TRACED BY DATE | SCALE

APPROVED John T. Webb 7/27/89
CHIEF DESIGN ENGINEER DATE
MANAGER DATE