EO-14645-C

REVISIONS

RWB 6/15/72	3
REMOVED BOWL SUPPORT-REDRAWN J.L. 6-6-72	
[illegible]	4
REMOVED NOTE FOR GALVANIZING SUPPORT J.L. 7-2-84	

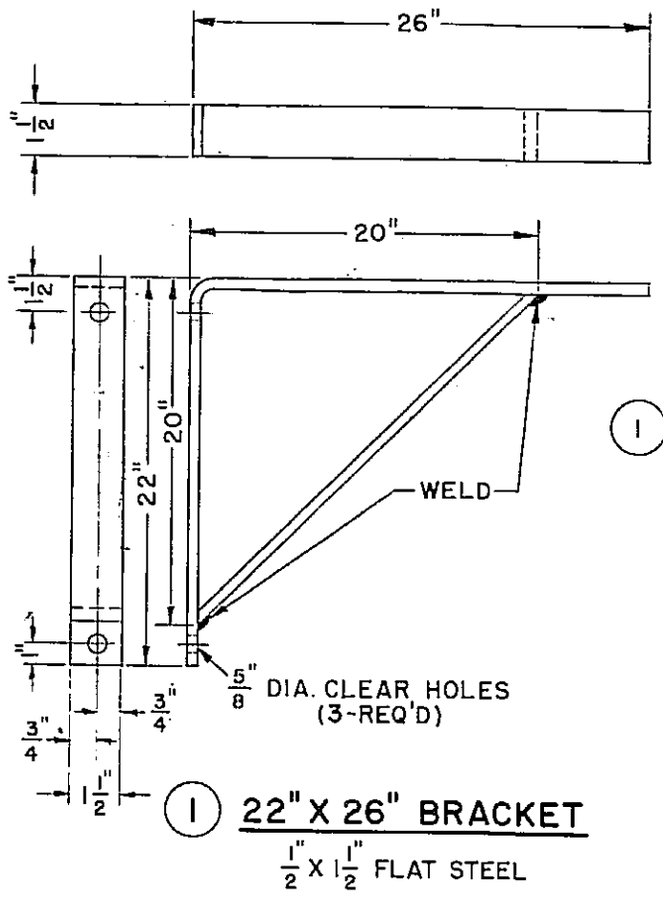

(1) 22" X 26" BRACKET

1/2" X 1 1/2" FLAT STEEL

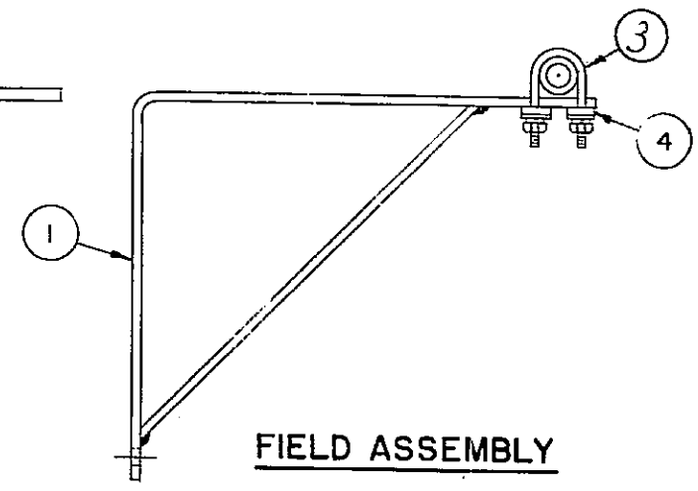

FIELD ASSEMBLY

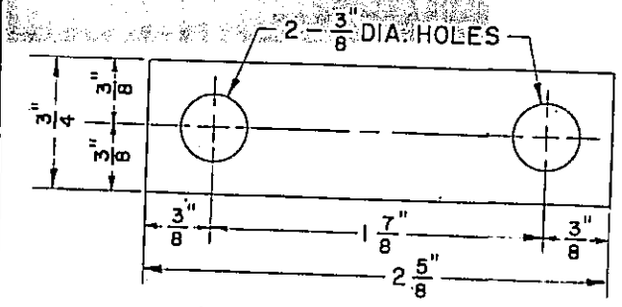

(4) CLAMPING PLATE

1/4" X 3/4" FLAT STEEL

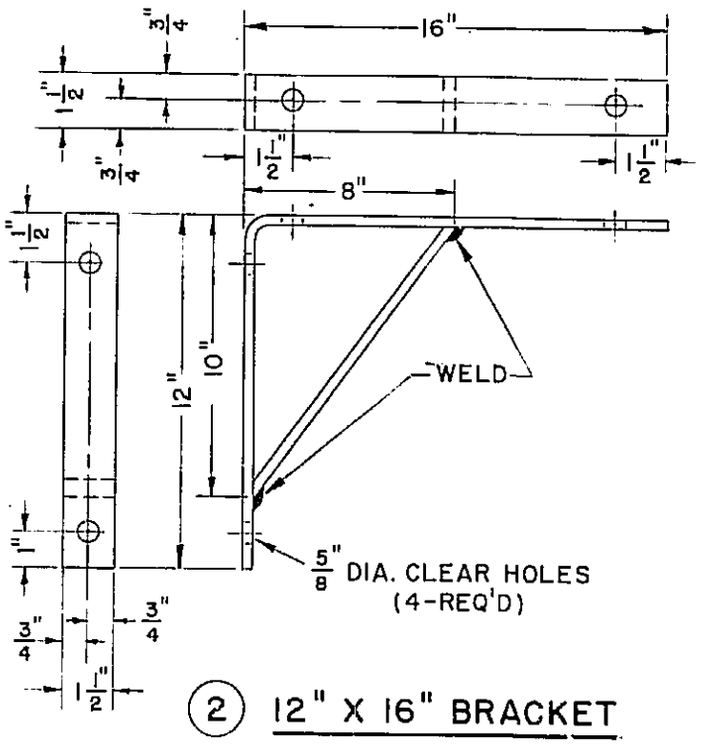

(2) 12" X 16" BRACKET

1/4" X 1 1/2" FLAT STEEL

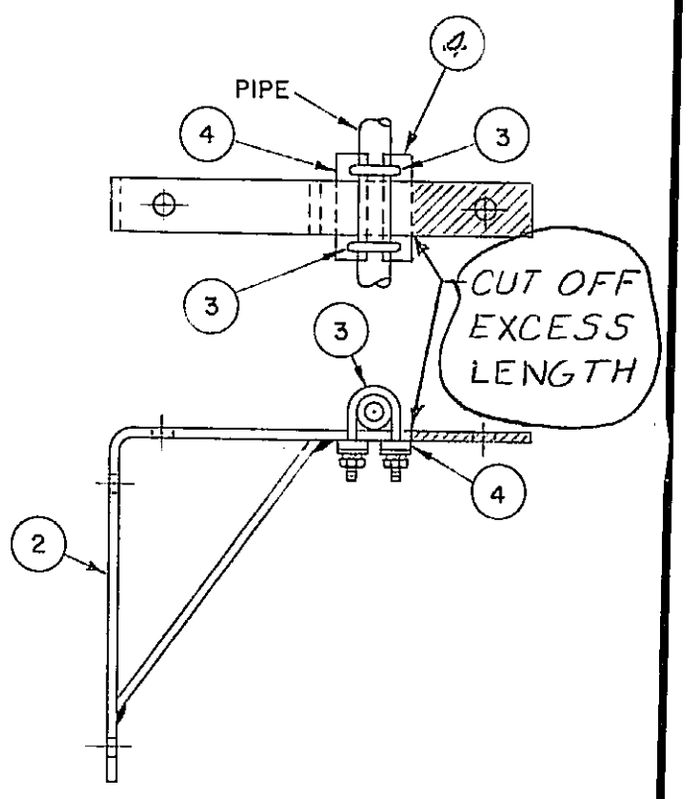

FIELD ASSEMBLY

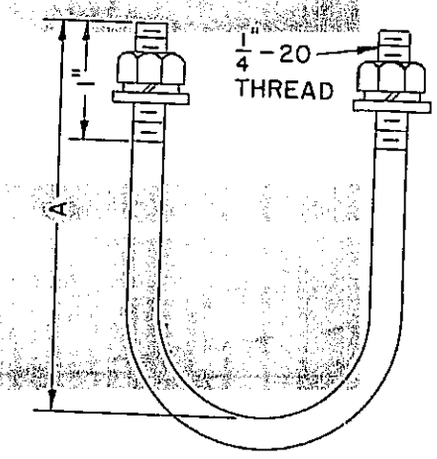

"U" BOLT	
PIPE SIZE	DIMENSION "A"
3/4"	2"
1"	2 1/2"
1 1/2"	3"
2"	3 1/2"
3"	4 1/2"
4"	5 1/2"

(3) "U" BOLT

1/4" DIA. STEEL - WITH 2 EACH STEEL WASHERS, LOCKWASHERS AND HEX. NUTS.

METERING SPECIFICATIONS AND PROCEDURES VOLUME NO. 3

MAILING LIST-3

SUPPORT FOR GAS METERS AND GAS SERVICE REGULATOR INSTALLATIONS

CONSOLIDATED EDISON COMPANY OF N.Y., INC.

DATE 12-29-47 LAST REV. 7-2-84 | DWG. NO. G-279 | REV. 4

NO.	DATE	REVISIONS	APPROVED

FOR APPROVAL

RW Bennett 6/15/72
METER ENGINEER DATE

EO-14645-C

DRAWN BY J.L. DATE 6-6-72 | CHECKED BY DATE | TRACED BY DATE | SCALE

APPROVED [illegible]

DESIGN ENGINEER [illegible] DATE 6/15/72

MANAGER DATE

032-42 (EA) 6-61 MECH. ENG.
DGILVIE PRESS, INC., BROOKLYN 17, N. Y. — NO. 166