TRANSMISSION

TRIM LINE

EO-9438-B

REVISIONS

ROY WILLIAMS 6-19-95	12

UPDATED DWG.
ADDED NOTE g
C.W. 6-19-95

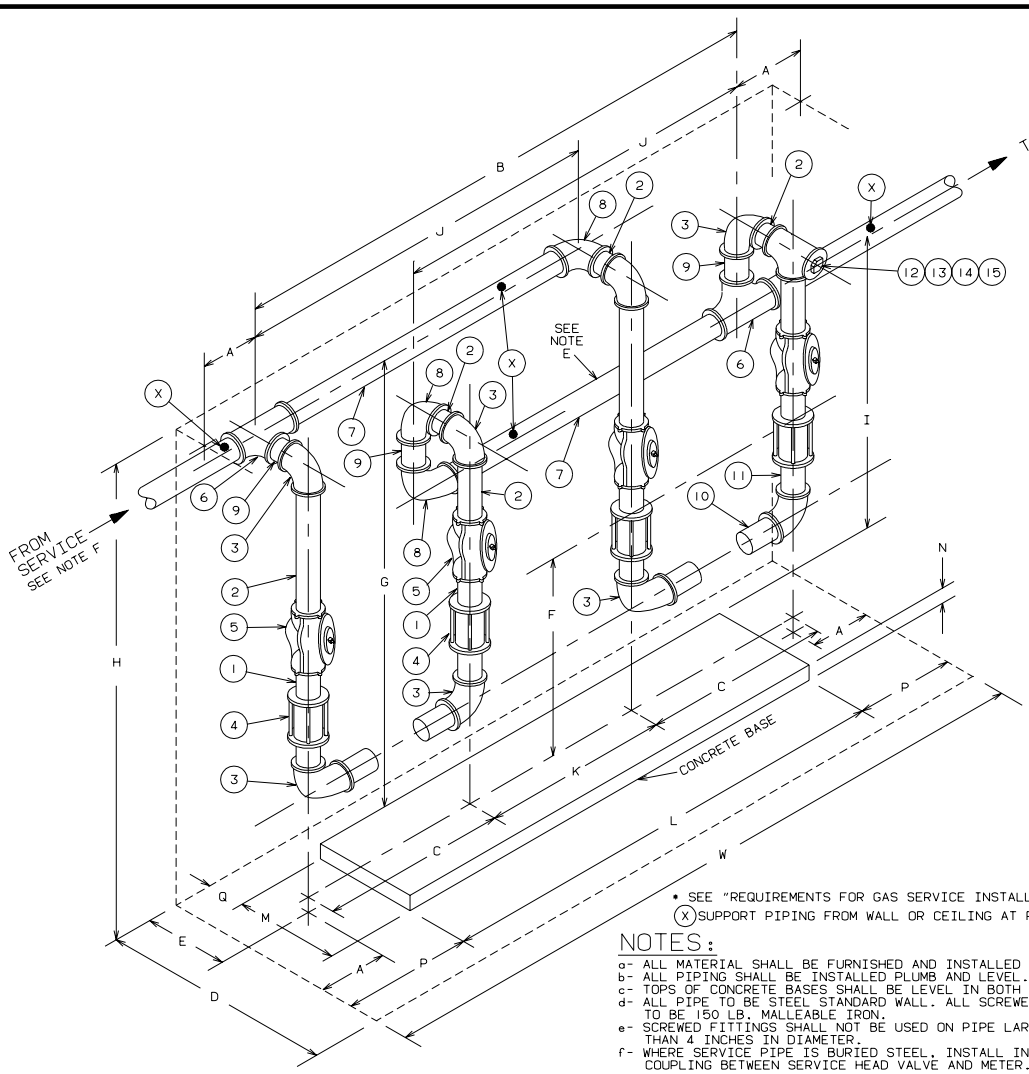

• SEE "REQUIREMENTS FOR GAS SERVICE INSTALLATIONS" BOOKLET.
(X) SUPPORT PIPING FROM WALL OR CEILING AT POINTS SHOWN.

NOTES:

a- ALL MATERIAL SHALL BE FURNISHED AND INSTALLED BY CUSTOMER.
b- ALL PIPING SHALL BE INSTALLED PLUMB AND LEVEL.
c- TOPS OF CONCRETE BASES SHALL BE LEVEL IN BOTH DIRECTIONS.
d- ALL PIPE TO BE STEEL STANDARD WALL. ALL SCREWED FITTINGS TO BE 150 LB. MALLEABLE IRON.
e- SCREWED FITTINGS SHALL NOT BE USED ON PIPE LARGER THAN 4 INCHES IN DIAMETER.
f- WHERE SERVICE PIPE IS BURIED STEEL, INSTALL INSULATING COUPLING BETWEEN SERVICE HEAD VALVE AND METER.
g- PIPING MUST BE LEFT CAPPED BY CONTRACTOR PRIOR TO METER INSTALLATION.

MATERIAL

ITEM NO.	DESCRIPTION	METER CLASS 2000	3000	6000
1	PIPE (THREAD ONLY ONE END)	3" x 6"	4" x 6"	4" x 6"
2	PIPE	3"	4"	4"
3	ELBOW, 90°	3"	4"	4"
4	COMPRESSION COUPLING •	3"	4"	4"
5	LUBRICATED PLUG VALVE •	3"	4"	4"
6	TEE	4" x 4" x 3"	4"	
	TEE, REDUCING, WELDING			6" x 6" x 4"
7	PIPE	4"	4"	6"
8	ELBOW, 90°	4" x 3"	4"	
	ELBOW, 90°, RED. ST'L. WELDING			6" x 4"
9	PIPE (THREADED ONLY ONE END)			4"
	PIPE	4"	4"	
10	NIPPLE	SEE TABLE "R"		
11	PIPE (THREAD ONLY ONE END)	SEE TABLE "R"		
12	PIPE PLUG, STEEL, HEX SOCKET	1/8"	1/8"	1/8"
13	TEE	3"	4"	4"
14	BUSHING HEX. STEEL	3" x 1"	4" x 1"	4" x 1"
15	BUSHING HEX. STEEL	1" x 1/8"	1" x 1/8"	1" x 1/8"

DIMENSIONS

	LOCATION	METER CLASS 2000	3000	6000
A	CLEARANCE FROM ℄ OF TEE (MIN.)	12"	12"	12"
B	℄ TO ℄ OF TEES	108"	108"	108"
C	℄ TO ℄ OF PIPES	46"	46"	46"
E	℄ OF PIPES TO REAR WALL	16 1/2"	16 1/2"	16 1/2"
F	END OF PIPE TO BASE	45"	45"	45"
G	℄ OF INLET HEADER TO BASE (MIN.)	74"	74"	74"
I	℄ OF OUTLET HEADER TO BASE (MIN.)	55"	55"	55"
J	℄ TO ℄ OF PIPES ON HEADER	62"	62"	62"
K	℄ TO ℄ OF PIPES	16"	16"	16"

CONCRETE BASE

L	LENGTH	94"	104"	104"
M	WIDTH	16"	21"	21"
N	HEIGHT	3"	3"	3"
P	CLEARANCE, EITHER SIDE	19"	14"	14"
Q	CLEARANCE, WALL TO BASE	8 1/2"	6"	6"

MINIMUM SPACE REQUIRED

H	HEIGHT	84"	84"	84"
W	WIDTH	132"	132"	132"
D	CLEARANCE FROM WALL	57"	57"	57"
	CLEARANCE REQUIRED FOR PASSAGE OF METER	30"	30"	30"

TABLE "R"

10	NIPPLE	3" x 13"	3" x 11"	4" x 10½"	4" x 8½"	4" x 8½"	4" x 5'
11	PIPE SEE NOTE (E)	3" x 28"	3" x 30"	4" x 24"	4" x 24½"	4" x 18"	4" x 20½"
ITEM NO.	METER WT. (LBS.)	120	135	175	238	310	389
	MFGR.	AMER.	EQMTR	AMER.	EQMTR	AMER.	EQMTR
	METER MODEL	AL-1400	3000	AL-2300	5000	AL-5000	10,000
	METER CLASS	2000		3000		6000	

METER SPECIFICATIONS AND PROCEDURES VOLUME NO. 3

INSTALLATION OF TWIN CLASS 2000 TO CLASS 6000 DIAPHRAGM GAS METERS-INDOORS

CONSOLIDATED EDISON COMPANY OF N. Y. INC.
GAS OPERATIONS DEPT.

DATE 7/15/49
LAST REV. 6-19-95

SPEC. NO. G-303 REV. 12

COMPUTER GENERATED DRAWING NOT TO BE HAND REVISED

FOR APPROVAL	DIV	SIGNATURE	DATE

EO-9438-B

DRAWN BY J.LUGO 8-18-93 DATE
TRACED BY DATE
CHECKED BY DATE
SCALE
APPROVED
CHIEF DESIGN ENGINEER DATE
DATE