0-8198-03	
REVISIONS	
P.S. 4-28-78	1
UPDATED SPEC'S	
HJN 4/19/78	
WN	2
MADE INACTIVE J.L. 9-11-91	

WELDING NECK FLANGE
300# AMERICAN ST'D.

STEEL PIPE
SEE COL. C FOR SCHED. NUMBER

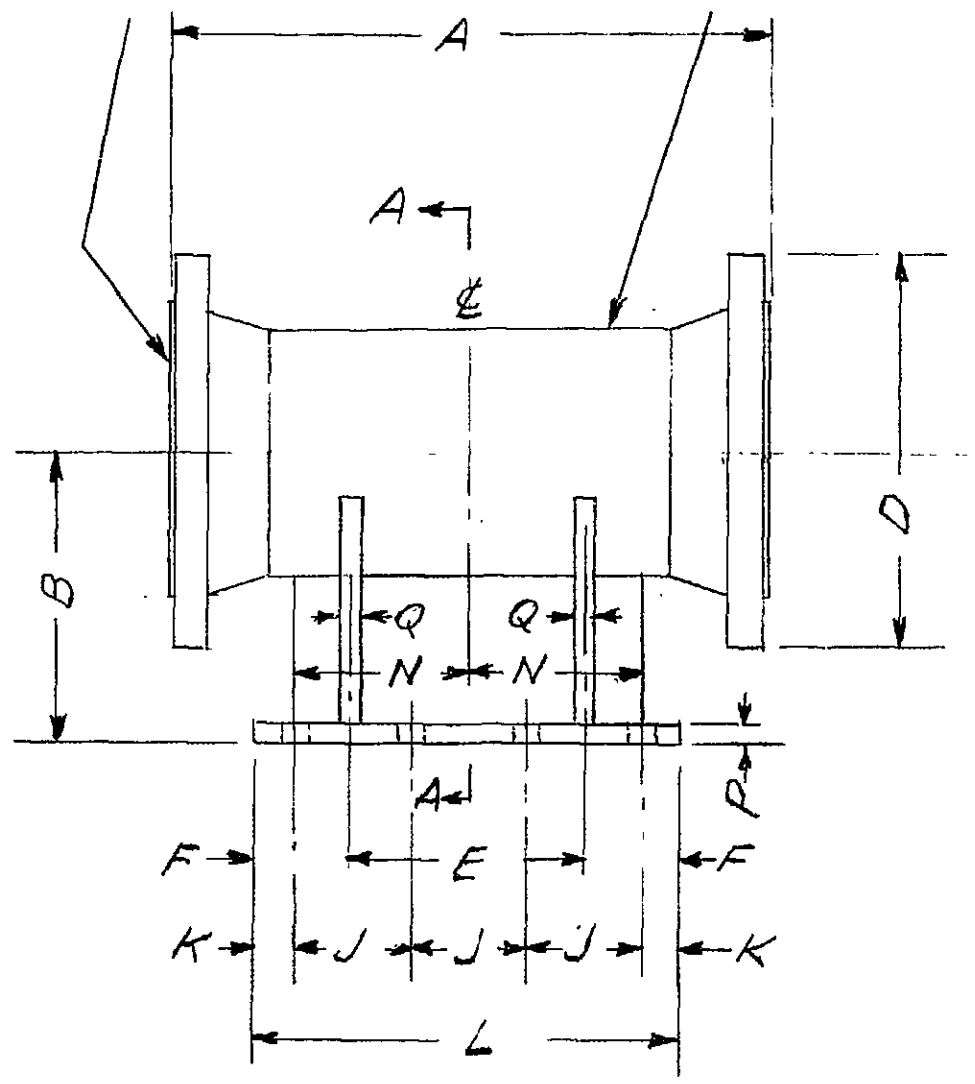

ELEVATION

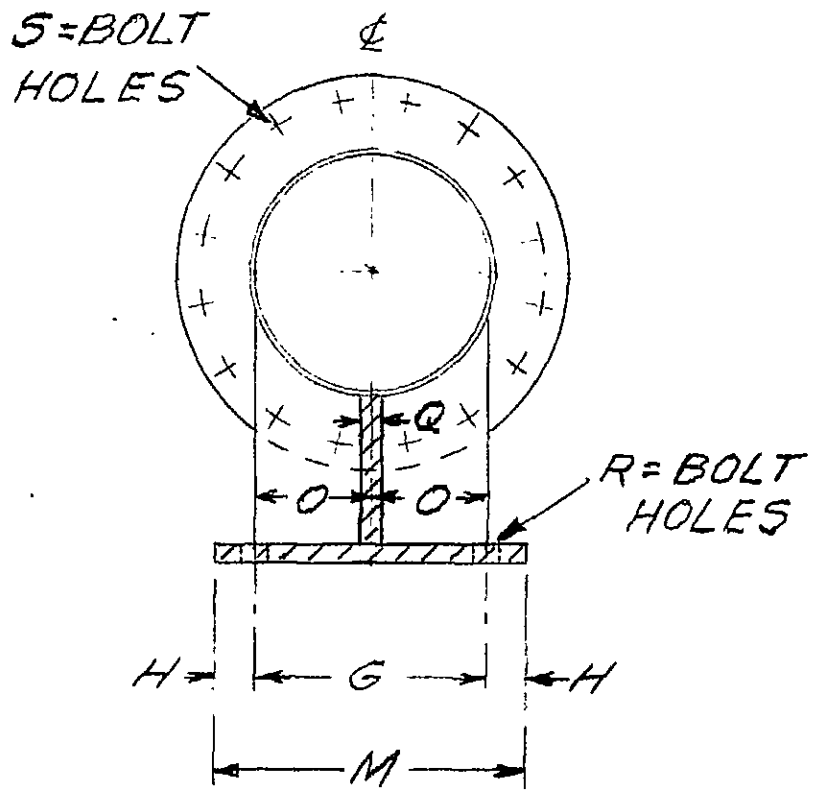

SECTION A-A

ALL DIMENSIONS GIVEN IN INCHES

PIPE SIZE	A	B	C	D	E	F	G	H	J	K	L	M	N	O	P	Q	R*	S*
6	20.	$11\frac{1}{2}$	40	$12\frac{1}{2}$	6	5	8	2	6	2	16	12	5	3	1	$\frac{3}{4}$	6-1"	12-$\frac{7}{8}$"
8	20.	$12\frac{3}{4}$	40	15	6	5	10	2	6	2	16	14	5	$4\frac{1}{4}$	1	1	6-$1\frac{1}{8}$"	12-1"
10	—	—	—	—	—	—	—	—	—	—	—	—	—	—	—	-		
12	31.	15.	$\frac{3}{8}$" THK	$20\frac{1}{2}$	12	5	12	2	6	2	22	16	9	6	1	1	8-$1\frac{3}{8}$"	16-$1\frac{1}{4}$"
14	—	—	—	—	—	—	—	—	—	—	—	—	—	—	—	-		
16	$34\frac{1}{2}$	$17\frac{1}{4}$	30	$25\frac{1}{2}$	12	5	14	$2\frac{1}{2}$	6	2	22	19	10	$7\frac{1}{2}$	$1\frac{1}{4}$	1	8-$1\frac{1}{2}$"	20-$1\frac{3}{8}$"
20	39.	$19\frac{1}{2}$	20	$30\frac{1}{2}$	13	$5\frac{1}{2}$	15	$2\frac{1}{2}$	$6\frac{1}{2}$	$2\frac{1}{4}$	24	20	11	8	$1\frac{1}{2}$	1	8-$1\frac{1}{2}$"	24-$1\frac{3}{8}$"
24	45.	22	20	36	13	$5\frac{1}{2}$	$19\frac{1}{2}$	$2\frac{1}{4}$	$6\frac{1}{2}$	$2\frac{1}{4}$	24	24	12	$8\frac{1}{2}$	$1\frac{1}{2}$	1	8-$1\frac{3}{4}$"	24-$1\frac{5}{8}$"

SPECIFICATIONS - ALL PIPE SHALL CONFORM TO CON. EDISON SPEC. S-9035.

WELDING NECK FLANGES SHALL CONFORM TO CON. EDISON SPEC. EO-100,144.

ALL STEEL PLATES SHALL BE OF A STRUCTURAL GRADE AND CONFORM TO ASTM SPEC. DES. A7.

PIPE ENDS SHALL BE BEVELLED. ALL WELDS AND BEVELS SHALL CONFORM TO CON. EDISON SPEC. G-1064

ALL BOLT HOLES SHALL STRADDLE THE VERTICAL CENTER LINE.

ANCHOR SPOOL SHALL BE PRESSURE TESTED AFTER FABRICATION BY A HYDROSTATIC TEST OF 300 PSI. HELD FOR 10 MIN.

* BOLT HOLES QUANTITY AND DIA.

WELDED STEEL ANCHOR SPOOL
FLANGED ENDS
MAXIMUM OPERATING PRESSURE
200 PSI. - STEAM

CONST. STD'S MANUAL No. 3 SECT 51, STEAM

THIS DRAWING INACTIVE, NOT FOR NEW CONSTRUCTION, FOR RECORD PURPOSE ONLY

CONSOLIDATED EDISON COMPANY OF N. Y., INC.
ELECTRICAL ENGINEERING DEPARTMENT
DISTRIBUTION STRUCTURES BUREAU

DATE 2-14-58
LAST REV. 9-11-91
DWG. NO. EO-8618-D REV. 2

NO.	DATE	REVISIONS	APPROVED
	4/28/78	NEXT SCHEDULED REVIEW 4/88	P.S.

FOR APPROVAL

DIV.	SIGNATURE	DATE
STEAM	[illegible]	3/6/58

DRAWN BY DATE: 2-14-58
CHECKED BY DATE: HAVILAND 2-14-58
TRACED BY DATE
SCALE: NONE
APPROVED BY DATE: L. J. [illegible] 3/10/58
DISTRIBUTION STRUCTURES ENG'R.

924-8 (M) 2C 2-53 ELEC. ENG.
K+E PHOENIX N166 2256 ® TRACING CLOTH

X 4/9/58