308657

REVISIONS

R.LUCAS 2/20/97	02
REVISED NOTE #4 IN DETAIL "A", CHANGED SPEC. OR STD. FOR ITEMS 5, 6, 8, 10, 20 REVISED NOTES #16 & #17. A.F. 2/20/97	
M.TURANCHIK 11/6/02	3
CHG'D. DIM. OF ITEM 6 NOTES 1, 8, & 9, ADDED NOTES 3b, 5, &19 C.W. 11/6/02	

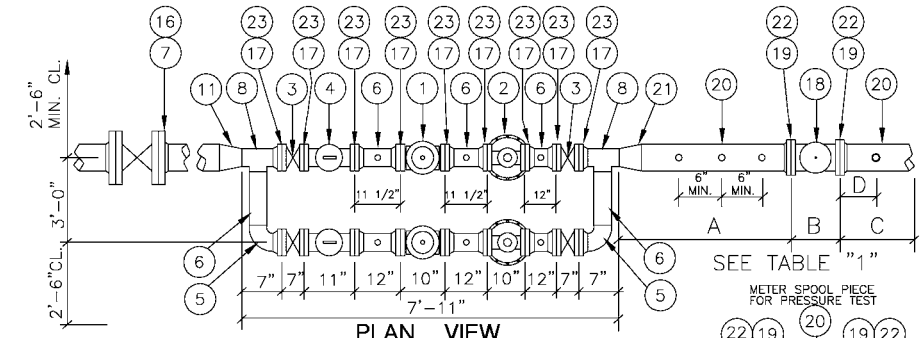

PLAN VIEW

SEE NOTE 5

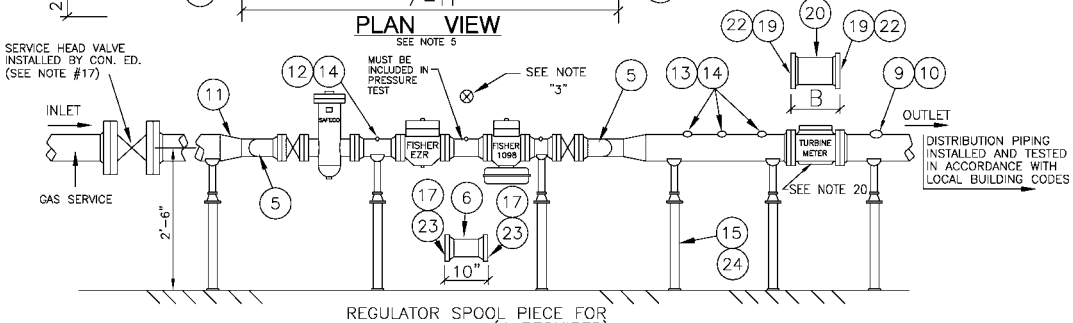

REGULATOR SPOOL PIECE FOR PRESSURE TEST (4 REQUIRED)

ELEVATION VIEW

BILL OF MATERIAL

ITEM	DESCRIPTION	SPEC. OR STD.	QUANTITY
1.	2" FISHER EZR REGULATOR, 150LB. SUPPLIED BY CON. ED.	———	2
2.	2" FISHER 1098 REGULATOR, 150 LB. SUPPLIED BY CON. ED.	———	2
3.	2" 150 LB. BALL VALVE (BALL-O-MAX., BALON-NO PLUG VALVES)	———	4
4.	2" GFT - JR. SAFECO GAS FILTER, SUPPLIED BY CON. ED.	———	2
5.	2" SHORT RADIUS 90° ELBOW, SCH. 40	ANSI B16.28	2
6.	2" STEEL PIPE, SCH. 40	ASTM -A106 GRADE "B"	AS REQ'D.
7.	V" STEEL FLANGE, 150 LB., FLAT OR RAISED FACE (TO MATCH VALVE FLANGE) (SEE NOTE 8)	ANSI B16.5	1
8.	2" X 2" X 2" STEEL TEE, SCH. 40	ANSI B16.9	2
9.	M " X 1" THREADOLET (SEE NOTES 7 & 9)	ANSI B16.9	1
10.	1" STEEL SQUARE HEAD PLUG	ANSI B16.14	1
11.	V" X 2" CONCENTRIC STD. STEEL REDUCER, IF REQUIRED	ANSI B16.9	1
12.	2" X 1/2" THREADOLET	———	6
13.	M" X 1/2" THREADOLET (SEE NOTE 9)	———	3
14.	1/2" STEEL SQUARE HEAD PLUG	ANSI B16.14	9
15.	PIPE SUPPORT	G-639	AS REQ'D.
16.	FLANGE INSULATING KIT SIZE V" (SEE NOTE 8, 16)	———	1
17.	2" STEEL FLANGE, RAISED FACE, 150 LB.	———	24
18.	M" TURBINE METER (SEE NOTE 9) SUPPLIED BY CON. ED.	———	1
19.	M" STEEL FLANGE, FLAT FACE, 150 LB. (SEE NOTE 9, 20)	ANSI B16.5	4
20.	M" STEEL PIPE, SCH. 40 (SEE NOTE 9)	ASTM -A106 GRADE "B"	AS REQ'D.
21.	M" X 2" STEEL REDUCER (SEE NOTE 9)	ANSI B16.9	1
22.	M" X 1/16" 150 LB. FULL FACE GASKET (SEE NOTE 6, 20)	———	2
23.	2" X 1/16" 150 LB. RING GASKET (SEE NOTE 6)	———	26
24.	BAKELITE, NEOPRENE, OR EQUIV. INSULATING MAT'L. (SEE NOTE 11)	———	AS REQ'D.
25.	2" VENT CAP 90° ELBOW WITH SCREEN - UPSCO	———	2
26.	2" ELBOW 90° BLACK MALLEABLE, THREADED, 150 LB.	ANSI B16.3	2

TABLE "1"

	SIZE OF TURBINE METER, M		
	6"	8"	12"
A	60"	80"	120"
B	16"	21"	30"
C	30"	40"	60"
D	12"	18"	24"

TABLE "2"

SIZE OF TURBINE METER	M	"
SIZE OF SERVICE HEAD VALVE	V	"

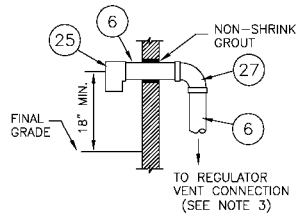

DETAIL "A"

VENT REQUIREMENTS:

1) VENT PIPE MUST :
   - BE PROPERLY SUPPORTED
   - TERMINATE OUTDOORS WITH A VENT CAP
   - BE GAS TIGHT
2) VENT CAP SHALL:
   - NOT BE LOCATED UNDER A BUILDING OVERHANG, PROJECTION OR WINDOW WHERE GAS CAN ACCUMULATE OR ENTER THE BUILDING
   - BE A MINIMUM OF 18" FROM ANY OPENING WHICH COULD ALLOW VENTED GAS TO ENTER THE BUILDING
   - BE A WEATHER AND INSECT RESISTANT FITTING
   - NOT BE COVERED IN ANY WAY THAT WOULD PREVENT FREE FLOW TO OUTSIDE AIR
   - BE A MINIMUM OF 18" ABOVE FINAL GRADE
3) EACH REGULATOR RUN WILL BE VENTED SEPARATELY.
4) CUSTOMER TO INSTALL 2" VENT PIPING FROM OUTDOOR VENT CAP ALONG INSIDE WALL TO A POINT WITHIN 2' OF EACH REGULATOR RUN. COMPANY TO MAKE FINAL CONNECTION TO VENT LINE.

NOTES:

1 - ALL MATERIAL SHALL BE FURNISHED AND INSTALLED BY THE CUSTOMER EXCEPT FOR THE FILTERS AND REGULATORS WHICH ARE FURNISHED BY THE COMPANY, AND THE METER WHICH IS FURNISHED AND INSTALLED BY THE COMPANY.
2 - DO NOT INCLUDE REGULATORS OR METER IN PRESSURE TEST. USE SPOOL PIECES SHOWN ON DRAWING.
3 - a) FOR INDOOR INSTALLATIONS, INSTALL TWO SEPARATE 2" VENT LINES TERMINATING 2 FEET FROM EACH REGULATOR RUN AT THE POINT SHOWN ON THE DRAWING. SEE DETAIL "A" FOR REGULATOR VENT PIPING REQUIREMENTS.
b) FOR OUTDOOR INSTALLATIONS, SERVICE REGULATOR VENT TERMINUS SHALL NOT BE LOCATED WITHIN 18" OF A BUILDING OPENING, NOR UNDER A BUILDING OVERHANG, PROJECTION, OR WINDOW WHERE GAS CAN ACCUMULATE OR ENTER THE BUILDING. THE VENT SHALL TERMINATE A MINUMUM OF 18" ABOVE GRADE AND MUST BE COVERED WITH AN INSECT-PROOF SCREEN.
4 - FOR INSTALLATIONS WHERE MINIMUM DISTANCES CANNOT BE MET, CONSIDER THE USE OF BLEED RINGS OR PIPING OFFSETS OR CONTACT GAS MEASUREMENT.
5 - FOR LOCATIONS WHERE HORIZONTAL CONSTRUCTION IS IMPRACTICAL DUE TO ROOM CONSTRAINTS, THE REGULATOR RUNS CAN BE PARALLELED IN THE VERTICAL PLANE. BE SURE THAT THE BOTTOM RUN IS 2'-6" ABOVE GRADE ON CENTER, AND THAT THE SECOND RUN IS 3'-0" ABOVE BOTTOM RUN ON CENTER. BE SURE TO KEEP A MINIMUM OF 2'-6" CLEARANCE FROM TOP RUN TO CEILING OR ANY OBSTRUCTION.
6 - FOR ALL GASKET MATERIAL, USE GARLOCK 3000 ONLY (1/16" THICK).
7 - ALL THREADOLETS MUST BE FULL BORE, FILLET WELDED AND PLUGGED. DO NOT WELD WITH METER INSTALLED.
8 - THE LETTER V REPRESENTS THE SIZE OF THE SERVICE HEAD VALVE. SEE TABLE 2 FOR EXACT SIZE. IF TABLE 2 IS NOT COMPLETELY FILLED OUT, CONTACT THE ASSIGNED ENERGY SERVICES REPRESENTATIVE.
9 - THE LETTER M REPRESENTS THE SIZE OF THE TURBINE METER. SEE TABLE 2 FOR EXACT SIZE. IF TABLE 2 IS NOT COMPLETELY FILLED OUT, CONTACT THE ASSIGNED ENERGY SERVICE REPRESENTATIVE.
10 - TABLE 2 MUST BE COMPLETED BY THE ASSIGNED ENERGY SERVICE REPRESENTATIVE BEFORE PROVIDING TO CONTRACTOR.
11 - INSULATING MATERIAL MUST BE INSTALLED BETWEEN THE PIPE SUPPORTS AND THE PIPE, SO THAT THE PIPE NEVER MAKES CONTACT WITH THE PIPE SUPPORT.
12 - FOR INSIDE INSTALLATIONS, A PRESSURE TEST MUST BE CONDUCTED AT 200 PSIG. AND FOR OUTSIDE INSTALLATIONS, A PRESSURE TEST MUST BE CONDUCTED AT 150 PSIG.; EXCEPT IN WESTCHESTER COUNTY WHERE INSIDE AND OUTSIDE INSTALLATIONS MUST BE PRESSURE TESTED AT 150 PSIG.
13 - ALL WELDED PIPING MUST BE BUTT WELDED. ALL BUTT WELDS SHALL BE RADIOGRAPHED.
14 - FOR LOCATIONS REQUIRING A DOMESTIC REGULATOR METER SET, IT SHALL BE INSTALLED IMMEDIATELY AFTER SERVICE HEAD VALVE WITH AN ISOLATION VALVE.
15 - PIPE SUPPORTS OR ANY BRACING SHALL NOT BE WELDED TO METER/DISTRIBUTION PIPING.
16 - REFER TO "REQUIREMENTS FOR GAS SERVICE INSTALLATION" BOOK FOR FURTHER INFORMATION.
17 - FOR WESTCHESTER, CUSTOMERS CONTRACTOR SHALL INSTALL SERVICE HEAD VALVE WHERE APPLICABLE.
18 - FOR ANY QUESTIONS, CONTACT GAS MEASUREMENT.
19 - ALL OUTDOOR PIPING SHALL BE PAINTED WITH A SUITABLE NON-LEAD OUTDOOR PAINT FOR USE ON METAL SURFACES.
20 - 12" TURBINE METERS HAVE RAISED FACE FLANGES. WHEN INSTALLING A 12" TURBINE METER, USE 12" 150 LB. RAISED FACE STEEL FLANGES (ITEM 19) AND 12"x1/16" 150 LB. RING GASKETS (ITEM 22).

METERING SPECIFICATIONS AND PROCEDURES VOLUME #3

GAS SERVICE BOOK

INSTALLATION OF PARALLEL FISHER 2"- EZR AND 2"- 1098 REGULATORS WITH TURBINE METER INDOORS AND OUTDOORS 50,000 CFH TO 150,000 CFH

CONSOLIDATED EDISON COMPANY OF N.Y., INC.
GAS ENGINEERING DEPT.

DATE 11/15/96
LAST REV. 11/6/02
DWG. NO. 308657 REV. 3

COMPUTER GENERATED DRAWING NOT TO BE HAND REVISED

DRAWN BY AL FORTE	DATE 11/15/96	CHECKED BY R. LUCAS	DATE 11/15/96
DISCIPLINE CODE TG		SCALE NONE	
APPROVED			
MGR. RICHARD DI LORETO			DATE 2/20/97
GENERAL MGR. DAVID DAVIDOWITZ			DATE 2/20/97