REVISIONS

R.R. 7-30-68	1
ADDED 1" HALF ROUND DRIP DEFLECTOR T.K. 7-30-68	
A.Lorian 10/21/69	2
CHD. CONCRETE SPEC. TO CONFORM WITH NEW CITY CODE. V.D. 10-8-69	
R. Rodrigue 12/11/70	3
RELOCATED SUMP OPENING IN FLOOR STOCK NO. ADDED A.D. 9-11-70	
Luis Ortego 11/18/86	4
ADDED LIFTING SLOTS. CORR. FILING INFO. W.J.T. 11-7-86	
S. YUAN 4/27/18	5
ADDED SECTIONS N–N AND J–J THAT ARE SHOWN IN SECTION C–C. UPDATED DIMENSIONS IN SECTION B–B. UPDATED STOCK NO.'S FOR WALLS AND FLOOR. CHANGED CONCRETE CLASS TO I FOR ITEMS 3 & 4. ADDED KNOCKOUT IN SECTIONS B–B & C–C. K.T. 4/27/2018	
S. YUAN 11/9/20	6
ADDED 2" MIN CONCRETE COVER ON WALL PLAN. ADDED SPEC EO–5228 NOTE. ADDED LIFTING HOLE INDICATION. REMOVED 2500 PSI CONCRETE NOTE IN TITLE BLOCK L. L. 11/9/2020	

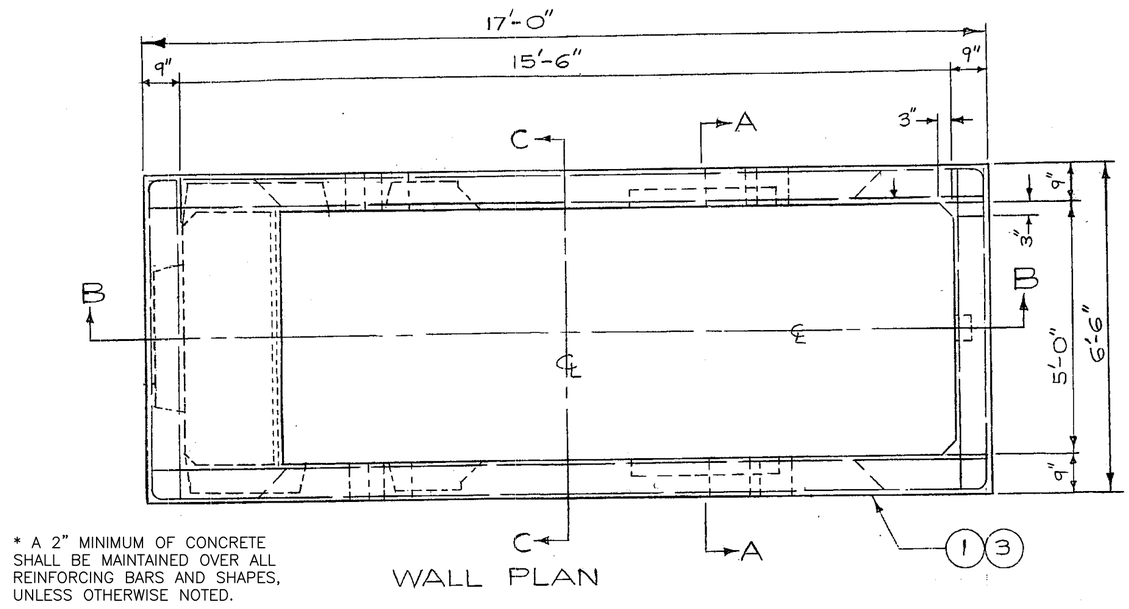

WALL PLAN

* A 2" MINIMUM OF CONCRETE SHALL BE MAINTAINED OVER ALL REINFORCING BARS AND SHAPES, UNLESS OTHERWISE NOTED.

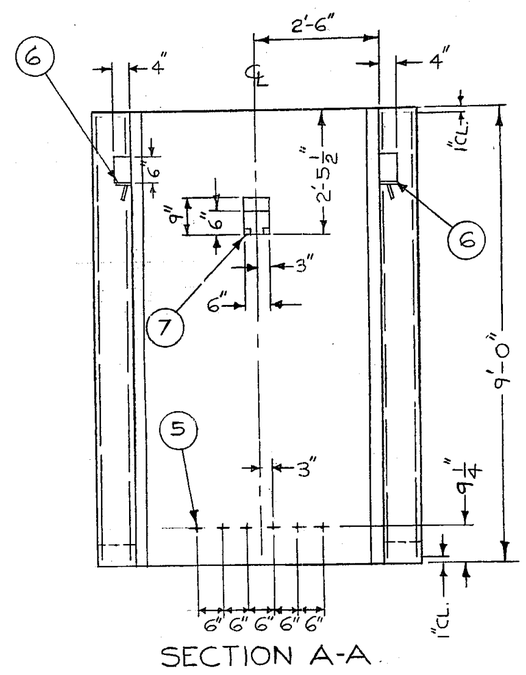

SECTION A-A

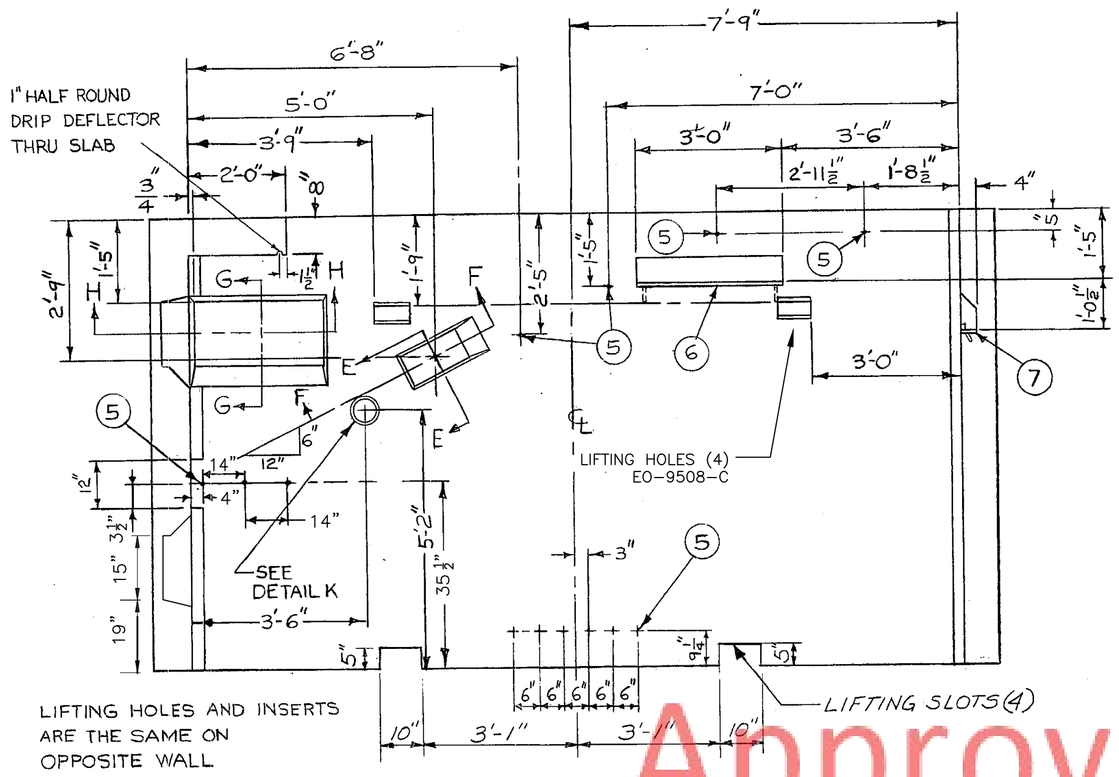

SECTION B-B

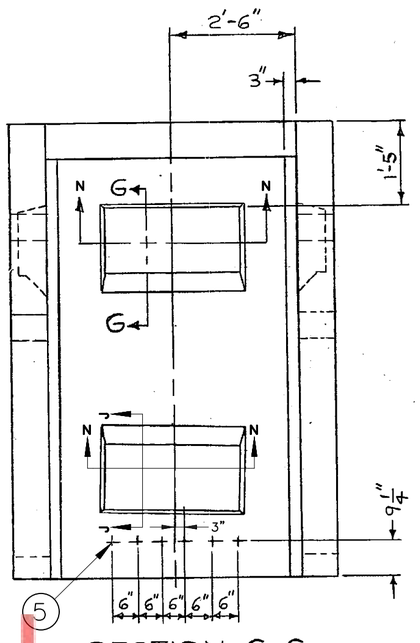

SECTION C-C

Approved

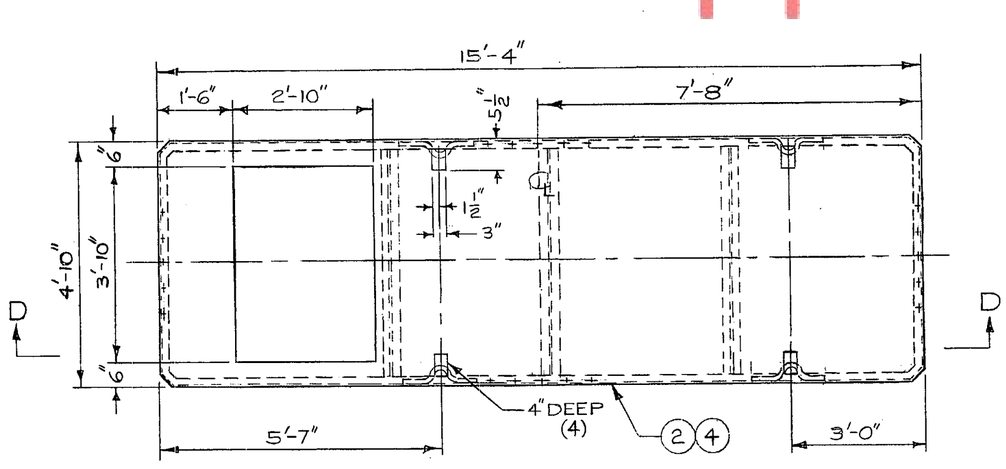

FLOOR PLAN

SECTION D-D

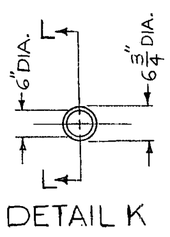

DETAIL K

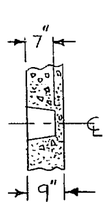

SECTION L-L

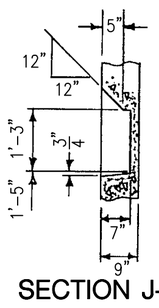

SECTION J-J

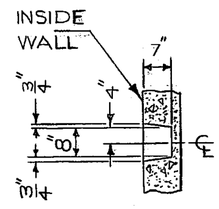

SECTION E-E

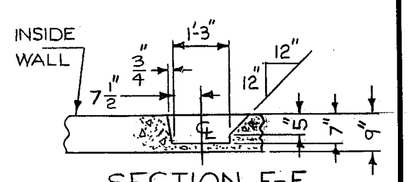

SECTION F-F

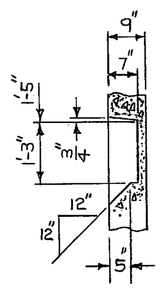

SECTION G-G

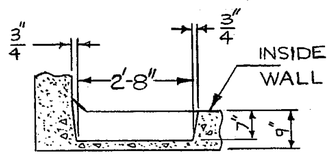

SECTION H-H

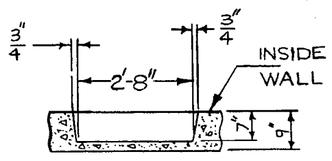

SECTION N-N

STOCK NO.
WALLS - NS0111539
FLOOR - NS0111538

WEIGHTS: FLOOR–5,541 LBS. WALLS – 44,400 LBS.

*STRUCTURE SHALL BE FABRICATED IN ACCORDANCE WITH SPEC. EO–5228.

REFERENCE DRAWINGS:

LIFTING HOLE EO–9508–C
PREFABRICATED REINFORCEMENT EO-13116-B
INSTALLATION EO-13101-B

* 32 BOLTS SHALL BE PLACED IN WEATHERPROOF BAGS AND ATTACHED TO FLOOR ANGLES FOR STORAGE AND DELIVERY.

ITEM NO.	QUANTITY	DESCRIPTION	SPEC. OR DWG. NO.	STOCK NO.
7	1	BEARING PLATE — END WALL ITEM 4	EO-7672-C	003-2151
6	2	BEARING PLATE — SIDE WALL ITEM 2	EO-7672-C	003-2243
* 5	38	5/8" INSERT WITH STEEL BOLT 2½" LONG	EO-100,133	035-0033
4	1.17 CU.YDS.	CONCRETE FOR FLOOR CLASS I	EO-1008	———
3	11 CU.YDS.	CONCRETE FOR WALLS CLASS I	EO-1008	———
2	1	PREFABRICATED REINFORCEMENT FOR FLOOR	EO-13116-B	———
1	1	PREFABRICATED REINFORCEMENT FOR WALLS	EO-13116-B	———

BILL OF MATERIAL

FIELD MANUAL No. 17
SECTION No. 3
VAULTS

CONSTRUCTION STD'S. MANUAL NO. 3
SECTION NO. 42 VAULTS

VAULT TYPE V15-6
PRECAST CONCRETE
15'-6" x 5'-0" x 8'-6"

CONSOLIDATED EDISON COMPANY OF N.Y., INC.
DISTRIBUTION ENGINEERING DEPT.

DATE 5-25-67
LAST REV. 11/9/2020

DWG. NO. EO-13109-B REV. 6

NO.	DATE	REVISIONS	APPROVED

FOR APPROVAL

DIV.	SIGNATURE	DATE
D.S.		8/25/67

DRAWN BY DJ PAOLA DATE 5-25-67
CHECKED BY J. FERNANDEZ DATE 8-4-67
TRACED BY DATE
SCALE 1/2" = 1'-0"
APPROVED
DESIGN ENGINEER DATE 8/18/67
STRUCTURAL ENGINEER DATE

REPRODUCE TO 8½ x 11