TRANSMISSION

TRIM LINE

EO-10264-B

REVISIONS

J.MARTIN 9/30/92	2
REDRAWN TO CADAM. UPDATED MATERIAL, CONSTRUCTION, AND INSTALLATION SPECS. CORRECTED FILING INFORMATION. JP W.J.TUBMAN 8/6/92	
S. YUAN 8/30/18	3
CHANGED ELECTRICAL TO DISTRIBUTION IN TITLE BLOCK. UPGRADED I BEAM STEEL TO GRADE 60. CHANGED REBAR SIZE & NAME IN ITEMS 3, 5, 6, 9-12, &15. ADDED SIKA NOTE TO CONSTRUCTION SPECIFICATIONS. K.T. 8/30/2018	

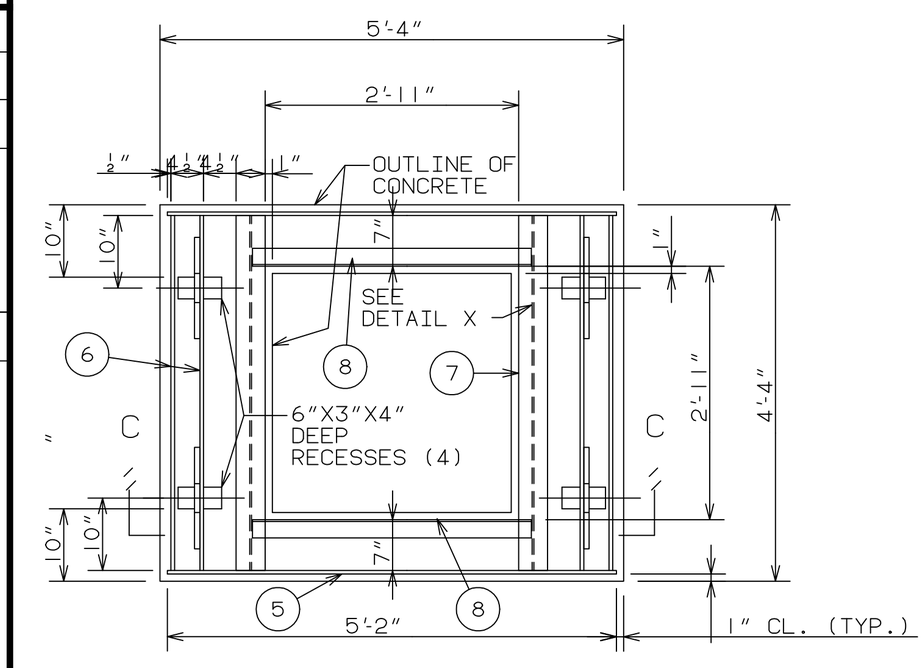

PLAN OF PREFABRICATED ROOF REINFORCEMENT

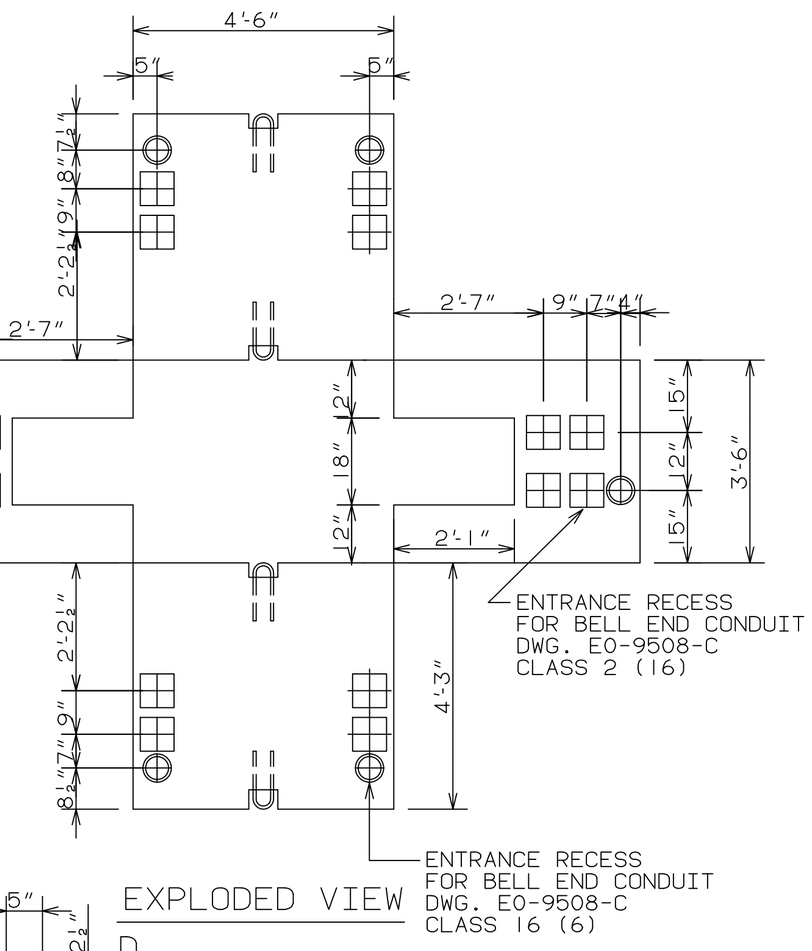

EXPLODED VIEW

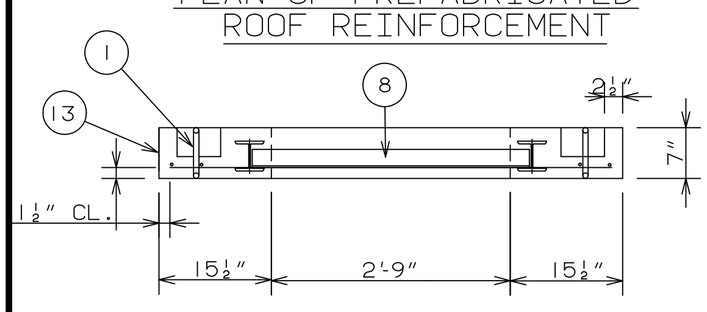

SECTION C-C

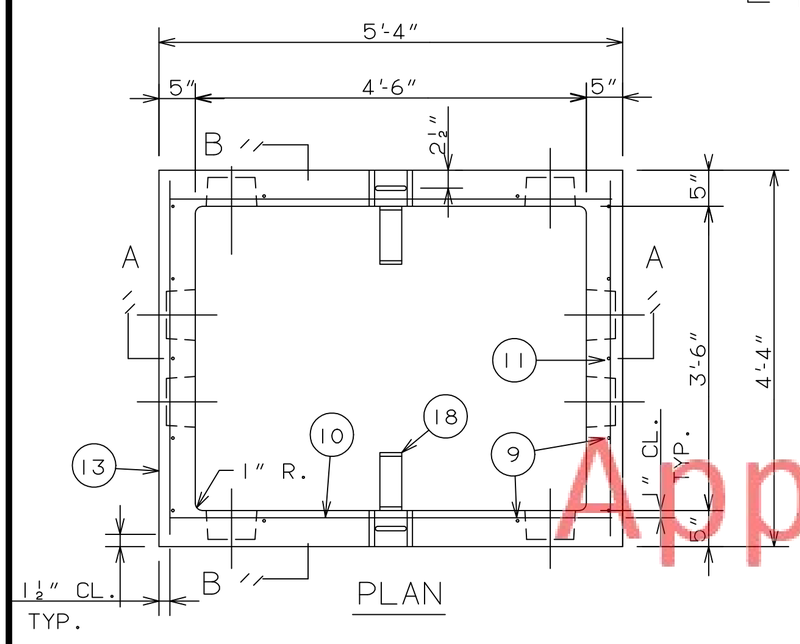

PLAN

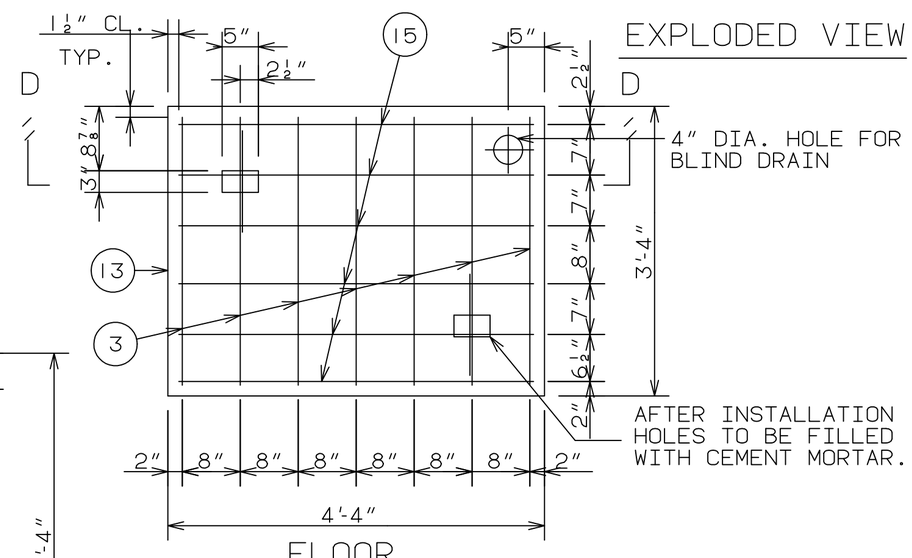

FLOOR

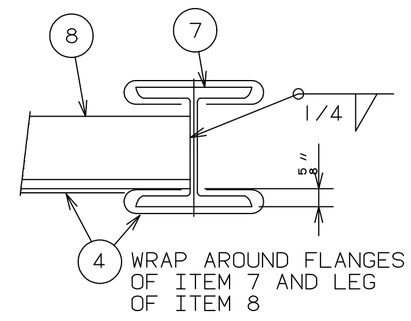

DETAIL X

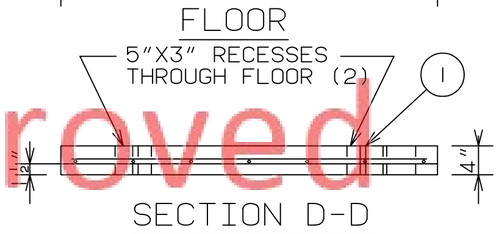

SECTION D-D

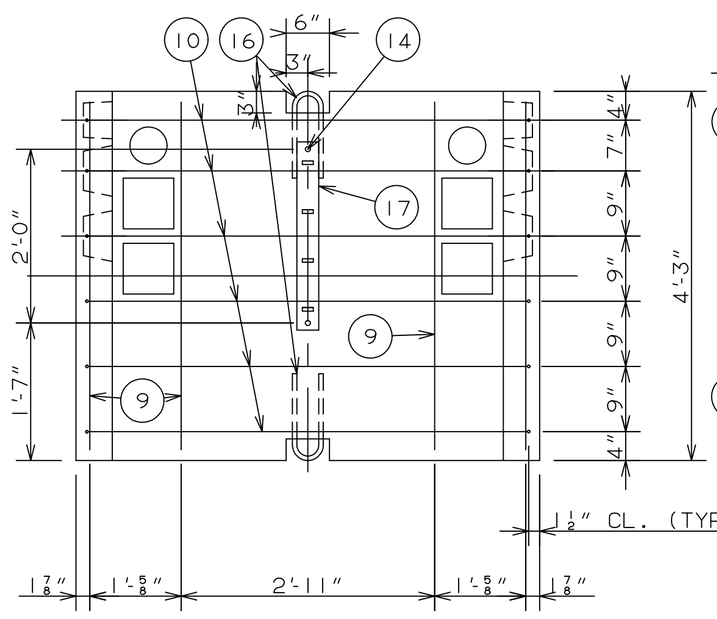

SECTION A-A

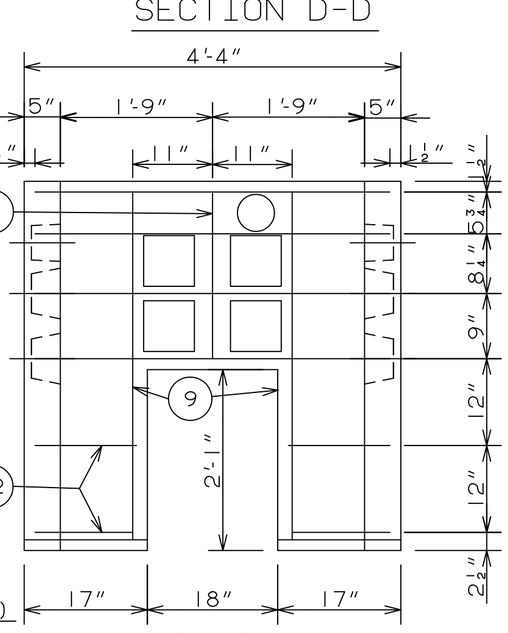

SECTION B-B

MATERIAL SPECIFICATIONS:

CONCRETE SHALL MEET EO-1008, CLASS 1.

REINFORCING BARS SHALL BE BILLET STEEL, DEFORMED, AND CONFORMING TO ASTM A-615, GRADE 60. REINFORCEMENT SHALL BE EPOXY-COATED (ASTM A-775).

STRUCTURAL STEEL I BEAM SHALL CONFORM TO ASTM A992.

STEEL WELDING SHALL MEET EO-11320.

INSERTS SHALL MEET EO-100,133.

CEMENT MORTAR SHALL MEET EO-100,167.

CONSTRUCTION SPECIFICATIONS:

REINFORCING BARS SHALL BE WIRE TIED AT ALL CONTACT POINTS WITH PLASTIC COATED TIE WIRE.

REINFORCEMENT SUPPORTED FROM FORMWORK SHALL REST ON COATED WIRE BAR SUPPORTS.

EPOXY-COATING DAMAGED BY HANDLING, WELDING, OR CUTTING OF REBARS SHALL BE REPAIRED WITH PATCHING MATERIAL CONFORMING TO ASTM A775.

1-1/2" MINIMUM CONCRETE PROTECTION REQUIRED ON ALL REBARS UNLESS NOTED OTHERWISE.

SPLICE MAIN HORIZONTAL BARS CUT FOR PLACEMENT PURPOSES WITH BARS OF SIMILAR SIZE. SPLICE 2'-6" LONG (MINIMUM) SHALL BE INSTALLED ACROSS THE CUT POSITION.

APPLY A COAT OF SIKA ARMATEC 110 BETWEEN STEEL BEAM & CONCRETE AS BONDING AGENT.

INSTALLATION SPECIFICATIONS:

PLACE BOX OVER A 3" SAND CUSHION IF IN ROCK EXCAVATION.

GROUT LIFTING SLOTS AND HOLES WITH CEMENT MORTAR.

WALLS CAN BE USED INVERTED IF NEEDED, WITH SLOT OPENING UPWARD.

GROUT EDGE SPACING BETWEEN PRECAST FLOOR AND WALLS AFTER FLOOR IS INSTALLED, SO BOX IS WATERTIGHT.

APPROXIMATE WEIGHT OF BOX:

CONCRETE WALLS AND FLOOR ------ 6085 LBS.
REINFORCEMENT BARS ---------- 130 LBS.
STRUCTURAL STEEL ---------- 160 LBS.
OTHER ---------- 12 LBS.

REFERENCE DRAWINGS:

ENTRANCE RECESS ---------- EO-9508-C

ITEM	QUANTITY	UNIT	DESCRIPTION
18	8	EACH	8" CABLE HANGER EO-2086-C
17	2	EACH	FOUR SLOT RACK PLATE EO-2086-C
16	4	EACH	LIFTING EYE ITEM 8 EO-7841-C
15	6	EACH	#4 REBAR 4'-1" LONG STRAIGHT
14	4	EACH	3/8"-16 INSERTS SPEC. EO-100,133
13	1.5	CU.YD.	CONCRETE - CLASS 1 EO-1008
12	8	EACH	#4 REBAR 1'-2 1/2" LONG - STRAIGHT
11	2	EACH	#5 REBAR 1'-11 1/2" LONG - STRAIGHT
10	12	EACH	#4 REBAR 7'-2" LONG 12" 5'-2" 12"
9	12	EACH	#5 REBAR 4'-1" LONG -STRAIGHT
8	2	EACH	2-1/2"X2-1/2"X1/4"ANGLES 3'-2-5/8" LONG USE BEAMWRAP
7	2	EACH	4" WF BEAMS 13.0 #/FT. 4'-0" LONG
6	4	EACH	#4 REBAR 4'-2" LONG - STRAIGHT
5	2	EACH	#4 REBAR 5'-2" LONG - STRAIGHT
4	AS REQUIRED		WWF 2X2-12/12 (GALV.) BEAM WRAPPER
3	7	EACH	#4 REBAR 3'-1" LONG STRAIGHT
2	1	EACH	FRAME AND COVER EO-13465-C, EO-9359-C
1	6	EACH	LIFTING EYE ITEM 7, EO-7841

BILL OF MATERIAL

FIELD MANUALS
NO. 4- SERV. INSTALL, SECT 1: SERVICE UNDERGROUND
NO. 17- SURVEY, SECT. 3: BOXES PROP. LINE.

CONSTRUCTION STD'S. MANUAL NO. 3, SECTION NO.36: SERVICES UNDERGROUND.

CUSTOMER PROPERTY LINE BOX PRECAST CONCRETE 4'-6"X3'-6"X4'-0" DEEP-SLOTTED

CONSOLIDATED EDISON COMPANY OF N. Y. INC.
DISTRIBUTION ENGINEERING DEPARTMENT

DATE 4/24/62
LAST REV. 8/30/2018
DWG. NO. EO-10264-B REV. 3

Approved

COMPUTER GENERATED DRAWING NOT TO BE HAND REVISED

FOR APPROVAL

DIV	SIGNATURE	DATE

DRAWN BY DATE CHECKED BY DATE
TRACED BY DATE SCALE
APPROVED
CHIEF DESIGN ENGINEER DATE
MGR. ELEC. DISTR. ENG & DES. DATE