EO-15934-B

REVISIONS

V.FERGUSON 10/16/01	3
REDRAWN TO AUTOCAD. ELIMINATED MOUNTING HOLES NOT NEEDED AND ADDED HOLES FOR NEW DEVICES. CHANGED NOTES 3 & 6. REMOVED DETAILS A & B. G.D. 10/16/01	
C. MAGOULAS 4/15/2011	4
CHANGED DEPARTMENT TO ELECTRIC METER SHOP. A.V. 4/12/11	

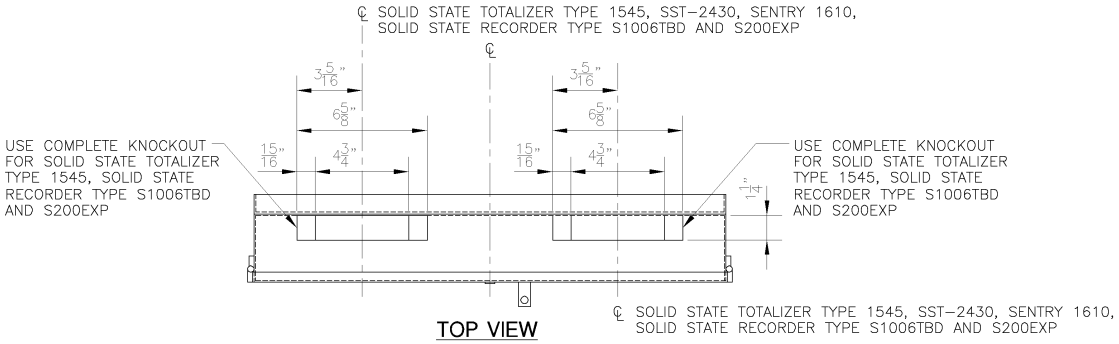

TOP VIEW

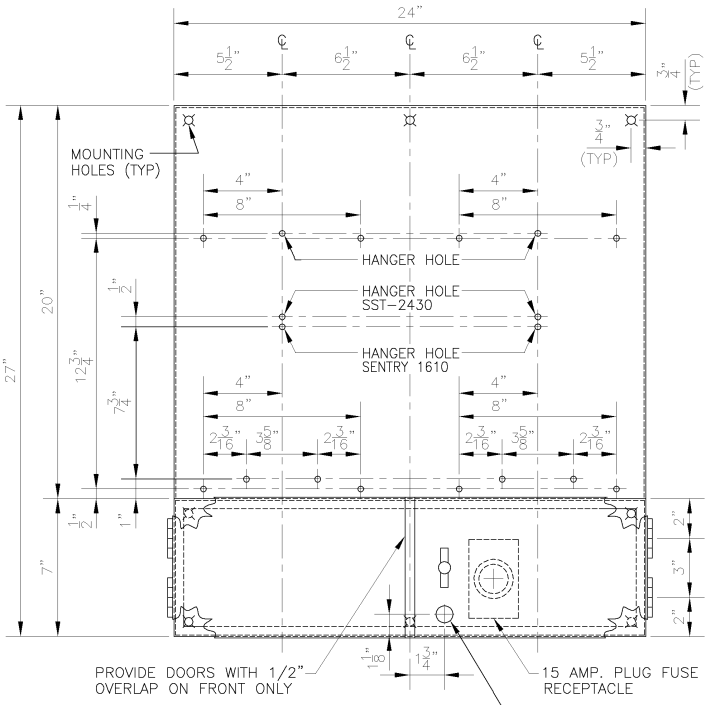

7/8" DIA. KNOCKOUT FOR BARREL LOCK ADAPTING BUSHING WITH SEALING PROVISION (BROOKS NO. 865-05 OR EQUAL) AND FLANGE TYPE RECEIVING BRACKET (E.J. BROOKS NO.869 OR EQUAL). LOCATE 1 1/8" FROM INSIDE BOTTOM OF BOX.

NOTE:
DIMENSIONS TAKEN OFF CABINET, NOT DOOR

FRONT VIEW

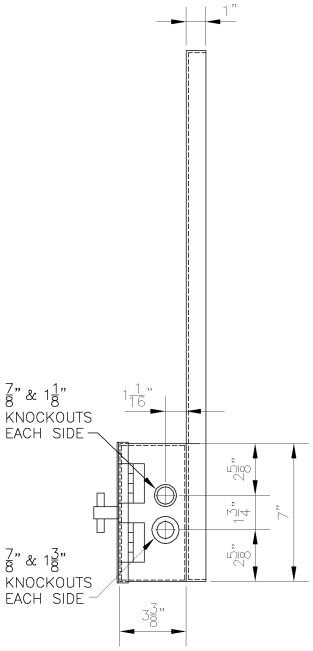

SIDE VIEW

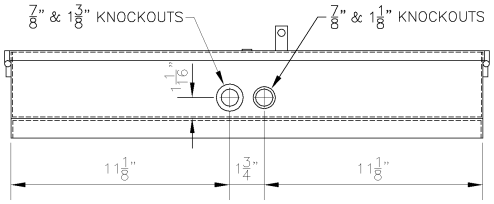

BOTTOM VIEW

HOLES SHOWN ⌑ ARE 7/16" DIA.
HOLES SHOWN o ARE 1/4"-20 TAP

NOTES:

1. THE CABINET SHALL BE OF NO.14 U.S.S. GAUGE, AND THE BACK PLATE OF NO.12 U.S.S. GAUGE SHEET STEEL.
2. UNLESS OTHERWISE SPECIFIED TOLERANCE ON HORIZONTAL TAPPPED HOLES TO BE ± .010", AND TAPPED HOLES SHALL HAVE AT LEAST THREE COMPLETE THREADS.
3. ALL STEEL SURFACES SHALL HAVE A PROTECTIVE COATING OF GRAY AIR DRY ENAMEL, (ASA 61 COLOR) WATER BASE.
4. CABINET DOORS SHALL BE PROVIDED WITH CATCHES AND FACILITIES TO ACCOMMODATE STANDARD SEALS AND PADLOCK WITH 5/16" DIA. HASP.
5. THE EQUIPMENT SHALL MEET THE REQUIREMENTS OF THE NATIONAL BOARD OF FIRE UNDERWRITERS, AND THE DEPARTMENT OF BUILDINGS OF THE CITY OF NEW YORK.
6. SAMPLES OF THE EQUIPMENT SHALL BE SUBMITTED TO ELECTRIC METER SHOP FOR APPROVED LISTING.

FIELD MANUAL NO. 4 SECTION 6 METER INSTALLATION

FIELD MANUAL NO. 16 SECTION 3 ELECTRIC METERING

MOUNTING EQUIPMENT 24" X 27" FOR DEMAND METERING DEVICES REVENUE METERING MES 104-A

CONSOLIDATED EDISON COMPANY OF N.Y., INC.
ELECTRIC METER SHOP

DATE 1/7/76	DWG. NO. EO-15934-B REV. 4
LAST REV. 3/23/11	

COMPUTER GENERATED DRAWING NOT TO BE HAND REVISED

DRAWN BY G.D. DATE 10/16/01	CHECKED BY DATE
DISCIPLINE CODE	SCALE 1/4"=1"
APPROVED	
MGR.	DATE
MGR.	DATE