EO-16890-B	
J.S. 03/12/90 G.WATTS 03/12/90	
REVISIONS	
V.FERGUSION 5/12/99	1
CHANGED NOTE 7 AND NOTE IN DIAGRAM G.D 5/12/99	
V.FERGUSION 7/3/03	2
ADDED NOTE 13. G.D 7/3/03	
R. LEE 4/30/2018	3
ADDED NOTE 14 AND CHANGED NOTES IN DIAGRAM L. LEGRAND 4/30/2018	
A.M 5/24/2024	4
REVIEWED DRAWING AND ADDED THE NOTE ON THE TOP OF THE DRAWING A.M 5/24/2024	

FOR REFERENCE ONLY, NOT FOR NEW INSTALLS

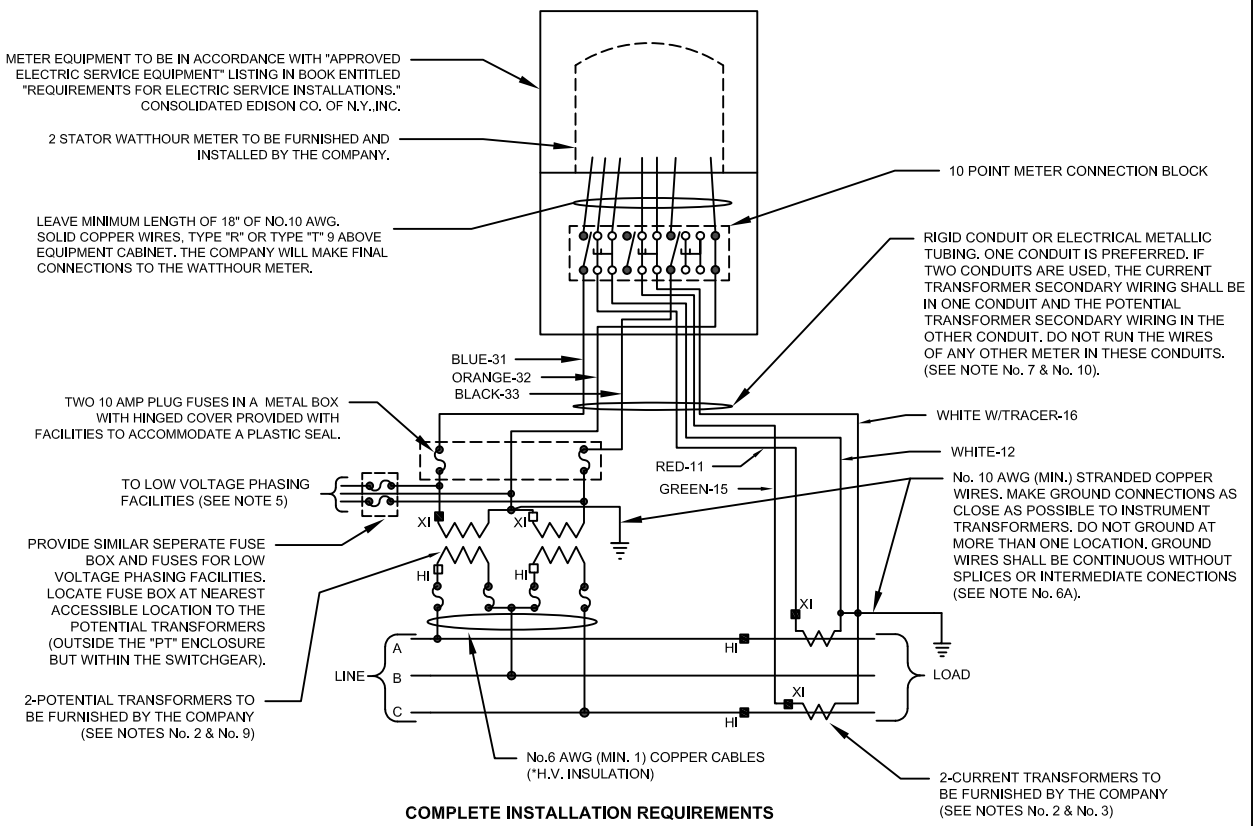

COMPLETE INSTALLATION REQUIREMENTS SHALL BE IN ACCORDANCE WITH MES 350.

NOTES:

1. THE CUSTOMER SHALL FURNISH LABOR AND MATERIAL FOR COMPLETE INSTALLATION, EXCEPT AS OTHERWISE NOTED.
2. CUSTOMERS INSTRUMENTS OR PROTECTIVE EQUIPMENT SHALL NOT BE CONNECTED TO REVENUE METERING CURRENT OR POTENTIAL TRANSFORMERS. CUSTOMER SHALL PROVIDE SEPARATE INSTRUMENT TRANSFORMERS FOR HIS EQUIPMENT WHICH MUST BE CONNECTED ON THE LOAD SIDE OF THE COMPANY REVENUE METERING TRANSFORMERS.
3. CURRENT TRANSFORMER SECONDARY TERMINALS BRIDGED BY A SHORT CIRCUITING WIRE SHALL NOT BE OPEN CIRCUITED BY THE CONTRACTOR. COMPANY WILL REMOVE SHORT CIRCUITING WIRE AND TAG WHEN MAKING FINAL CONNECTIONS TO THE WATTHOUR METER AND CURRENT TRANSFORMERS.
4. WIRING TO CURRENT AND POTENTIAL TRANSFORMER SECONDARIES SHALL BE CUT AND FORMED TO PROPER LENGTH AND IDENTIFIED. COMPANY WILL MAKE FINAL CONNECTIONS TO INSTRUMENT TRANSFORMER SECONDARY TERMINALS. CONNECTIONS TO THE BOTTOM OF THE METER CONNECTION BLOCK SHALL BE MADE BY THE CUSTOMER.
5. LOW VOLTAGE PHASING FACILITIES ARE REQUIRED WHERE SERVICE CONSISTS OF MORE THAN ONE FEEDER, 13.2 KV AND ABOVE (REFER TO SPEC.NO.E0-3299-D).
6. INSTRUMENT TRANSFORMER CASES AND METER CASES. IF MOUNTED ON INSULATED STRUCTURES, SHALL BE GROUNDED SEPARATE FROM SECONDARY WIRING GROUNDS.USING NO.6 AWG. (MIN.) COPPER FOR TRANSFORMER CASES.AND NO.10 AWG. (MIN.) COPPER FOR METER CASES.
7. CABLE SHALL BE COLOR CODED 1-7 CONDUCTOR COPPER NO.9 AWG.STRANDED (19/22) TYPE"R" OR "T" DR 7-1 COLOR CODED CONDUCTOR COPPER NO.10 AWG.SOLID TYPE "R" OR "T". USE TYPE "RW" OR "TW" CABLE IN WET OR UNDERGROUND INSTALLATIONS.
8. ALL WIRING SHALL BE CONTINUOUS WITHOUT SPLICES OR INTERMEDIATE TERMINAL POINTS AS STATED IN MES 350. WIRING RING LUGS SHALL BE USED TO CONNECT STRANDED WIRES TO METER CONNECTION BLOCK. WIRING THROUGH PARTITIONS SHALL BE INSTALLED IN CONDUIT NIPPLES FITTED WITH LOCKNUTS AND BUSHINGS OR OTHER EQUIVALENT MEANS FOR PROTECTION.
9. PRIMARY FUSED POTENTIAL TRANSFORMERS ARE ONLY REQUIRED FOR 13.2 KV SERVICE.
10. WHERE IT IS IMPRACTICAL TO USE METAL CONDUIT WITHIN THE SWITCHGEAR, THE SECONDARY WIRING SHALL BE PROPERLY SUPPORTED WITH ADEQUATE CLEARANCE FROM HIGH TENSION BUSSES AND EQUIPMENT, AND BE PROTECTED BY USE OF GREENLEE CONDUIT THAT IS PROPERLY DRESSED ALONG ITS RUN.
11. "CT" AND "PT" SECONDARY WIRING SHALL NOT PASS THROUGH THE PHASING FACILITY BOX OR OTHER NON COMPANY FUSE BOXES.
12. METERING COMPARTMENTS WITH SWING DOORS OR PANELS MUST HAVE FLEXIABLE BRAIDED BOND WIRE OR CABLE, NOT SMALLER THAN NO.4 AWG COPPER INSTALLED ACROSS THE HINGE TO ASSURE A SATISFACTORILY GROUNDED PANEL AS PER MES 350.
13. PT SHIELD. PART #20119 AVAILABLE FROM MAINTENANCE SERVICES, VAN NEST YARD. FOR USE AS INSULATING BARRIER AND ANIMAL GUARD.
14. NO A-BASE EQUIPMENT SHALL BE ISSUED FOR NEW LOW TENSION INSTALLATIONS. THIS SPECIFICATION IS FOR REFERENCE ONLY.

LEGEND:

- POTENTIAL TRANSFORMER PRIMARY WIRING SHALL BE NO.6 AWG.(MIN) COPPER CABLES INSULATED FOR LINE TO LINE VOLTAGE.

- POLARITY MARKINGS ON CURRENT AND POTENTIAL TRANSFORMERS.

REFERENCE SPECS:

TEN POLE CONNECTION BLOCK ---------- MES 200
HIGH TENSION METERING INSTALLATIONS ---------- MES 350
WIRING DIAG. FOR METERING 27 & 33KV 3 PHASE
3 WIRE ---------- MES 273B
INSULATING & TAPING OF ELECTRICAL CONNECTIONS --- E.1.3002

FIELD MANUALS:
NO.4: SERIVCE INSTL.
SECT.6: METER INSTL.
No.16: SERV. INSP. AND CNTRL.
SECT.3: ELECT. METERING

WIRING DIAGRAM FOR METERING 13KV, 3 PHASE,3 WIRE HIGH TENSION SERVICE

CONSOLIDATED EDISION COMPANY OF N.Y., INC.
DISTRIBUTION ENGINEERING DEPARTMENT

DATE	04/15/2024	SPEC. NO.	MES 273-A	REV. 4
LAST REV	5/24/2024			

FOR APPROVAL	DIV	SIGNATURE	DATE	DRAWN BY JAMES T. WEBB DATE 03/16/90	CHECKED BY R.M. DATE 03/15/90
				TRACED BY DATE	SCALE NONE
				APPROVED JAMES T. WEBB 03/16/90	
				CHIEF DESIGN ENGINEER H.C.MAR DATE 03/15/90	
EO-16890-B			REV. 4	DIST. INSTRUMENTATION ENGR. DATE	