348209

Robert Gentile 08.26.05

REVISIONS

Robert Gentile 04.04.07	1
ADDED 600 KCMIL NOTE BACK TO THE RECOMMENDED STANDARDS TABLE	
JDV 04.03.07	

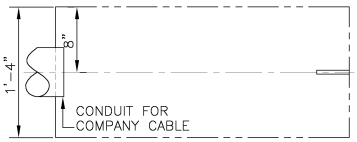

TOP VIEW

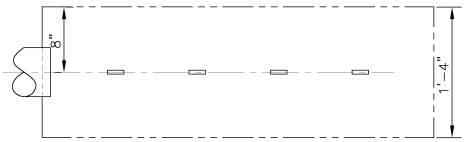

TOP VIEW

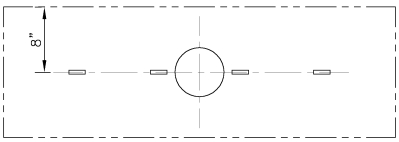

TOP VIEW

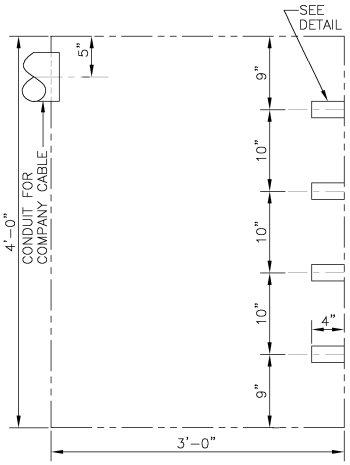

FRONT VIEW
ARRANGEMENT NO. 1

4'-0"HIGH x 3'-0"WIDE x 1'-4"DEEP SPACE
COMPANY CABLES AT SIDE,
CUSTOMER TERMINALS AT SIDE.

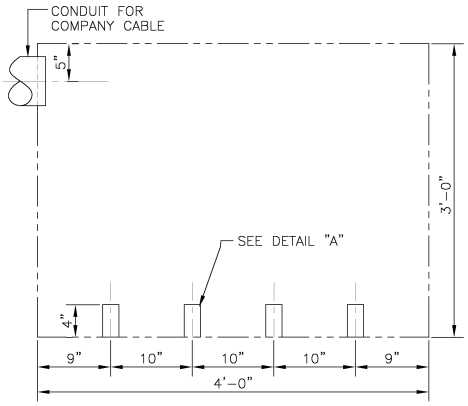

FRONT VIEW
ARRANGEMENT NO. 2

3'-0"HIGH x 4'-0"WIDE x 1'-4"DEEP SPACE
COMPANY CABLES AT SIDE,
CUSTOMER TERMINALS AT BOTTOM.

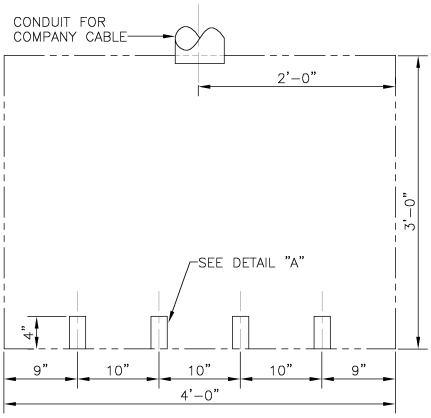

FRONT VIEW
ARRANGEMENT NO. 3

3'-0"HIGH x 4'-0"WIDE x 1'-4"DEEP SPACE
COMPANY CABLES AT TOP
CUSTOMER TERMINALS AT BOTTOM

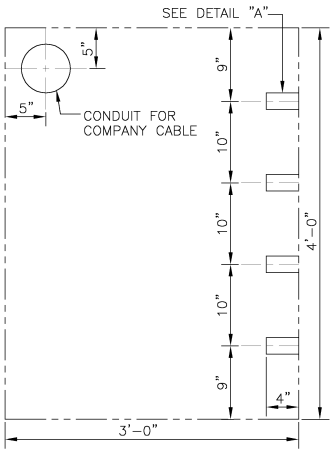

FRONT VIEW
ARRANGEMENT NO. 4

4'-0"HIGH x 3-0"WIDE x 1'-4"DEEP SPACE
COMPANY CABLES AT REAR
CUSTOMER TERMINALS AT SIDE

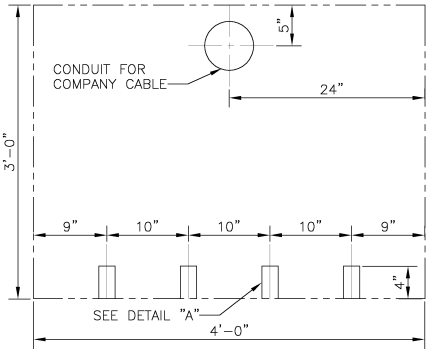

FRONT VIEW
ARRANGEMENT NO. 5

3'-0"HIGH x 4'-0"WIDE x 1'-4"DEEP SPACE
COMPANY CABLES AT REAR
CUSTOMER TERMINALS AT BOTTOM

NOTES:

1. THE RECOMMENDED TYPE OF CONNECTORS AND THE METHOD OF CONNECTION ARE GIVEN IN SPEC. EO-5403.
2. THE CUSTOMER SHALL PROVIDE AND CONNECT HIS SERVICE CABLES TO A SUITABLE COPPER TERMINATING DEVICE SECURED TO THE BOX, UNDER ANY OF THE FOLLOWING CONDITIONS:
   A) WHEN COPPER OR ALUMINUM CABLES OTHER THAN THOSE LISTED UNDER RECOMMENDED STANDARDS ARE USED.
   B) WHEN THERE WILL BE 3 OR MORE SETS OF CUSTOMER CABLES INTO OR OUT OF THE SERVICE END BOX.
3. THESE ARE MINIMUM REQUIREMENTS FOR CONNECTION OF THE COMPANY'S CABLES AND DO NOT COVER REQUIREMENTS FOR CUSTOMER'S CABLES.
4. NO CUSTOMER CABLES SHALL OCCUPY SPACE IN AREA SHOWN INSIDE END BOXES.
5. A BOX ENCLOSING THE REQUIRED SPACE SHALL CONFORM TO THE FOLLOWING:
   A) BOX SHALL BE IDENTIFIED BY MANUFACTURER'S NAME.
   B) BOX SHALL BE MADE OF GALVANIZED SHEET STEEL AND HAVE A FINISH OF GRAY ENAMEL.
   C) THE GAUGE OF THE STEEL SHALL CONFORM WITH THE REQUIREMENTS OF THE UNDERWRITERS LABORATORIES INC.
   D) ALL REMOVABLE BOX COVERS SHALL BE SEALABLE AND BE EQUIPPED WITH TWO HANDLES PER COVER.
   E) THE CUSTOMER SHALL SUBMIT FOR COMPANY APPROVAL. ANY PROPOSED CHANGE IN DESIGN OF BOXES INDICATED ON THIS DRAWING.
6. **"⚠ DANGER 277/480 VOLTS" – RED LABEL WITH 3/8" WHITE LETTERING AND EXCLAMATORY ALERT SYMBOL LOCATED ON THE INSIDE BACK SURFACE OF THE ENCLOSURE.**
7. **"⚠ CAUTION 277/480 VOLTS" – YELLOW LABEL WITH 3/8" BLACK LETTERING AND EXCLAMATORY ALERT SYMBOL LOCATED ON THE OUTSIDE COVER OF THE ENCLOSURE.**

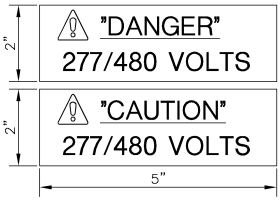

SIGNAGES
(SEE NOTES #6 AND #7)

REF. DWG'S:

BUILDINGS WITH BASEMENTS AT PROPERTY LINE:_____EO-6208-D
BUILDINGS WITH BASEMENTS BACK OF PROPERTY LINE:____EO-6209-D
BUILDINGS WITHOUT BASEMENTS AT PROPERTY LINE:_____EO-6211-D
BUILDINGS WITHOUT BASEMENTS BACK OF PROPERTY LINE:_EO-6212-D
BUILDINGS WITH SUITABLE SUB-SIDEWALK SPACE
OUTSIDE OF PROPERTY LINE:_____EO-6214-D
FOR 120/208V SPACE REQUIREMENTS – MAX. 1-500KCMIL COPPER
CABLES PER PHASE:_____EO-9525-B
SPACE REQUIREMENTS – MAX. 2-500KCMIL COPPER
CABLES PER PHASE:_____348210-0
SPACE REQUIREMENTS – MAX. 3-500KCMIL COPPER
CABLES PER PHASE:_____348211-0

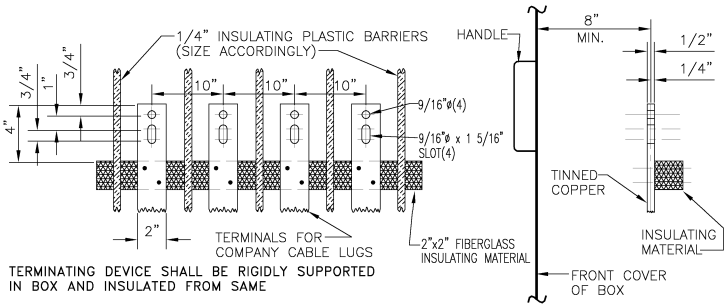

TERMINATING DEVICE SHALL BE RIGIDLY SUPPORTED IN BOX AND INSULATED FROM SAME

FRONT VIEW

SIDE VIEW

DETAIL "A" - CUSTOMER'S TERMINATING DEVICE

4" LENGTH IS REQUIRED FOR CONNECTION OF LUGS

RECOMMENDED STANDARD CABLE SIZES:

COPPER: #6, #2, 2/0, 4/0, 500 KCMIL: CON EDISON
#6, #2, 2/0, 4/0, 500 KCMIL, 600 KCMIL : CUSTOMER ONLY
ALUMINUM: #4, 1/0, 4/0, 350 KCMIL, 2-350 KCMIL,
750 KCMIL, 900 KCMIL: CUSTOMER ONLY

CUSTOMER'S 265/460 VOLT ELECTRIC SERVICE SPACE REQUIREMENTS FOR COMPANY CABLES IN SERVICE END BOXES, 1-500KCMIL COPPER CON EDISON CABLE PER PHASE

CONSOLIDATED EDISON COMPANY OF N.Y., INC.
DISTRIBUTION ENGINEERING DEPT.

DATE 08.26.05	DWG. NO 348209 REV. 1
LAST REV. 04.03.07	

FIELD MANUAL
NO. 4:SERV. INST'L.
SECT.1:SERV. UNGRND.
NO. 16:SERV. INSP. & CTRL
SECT. 4:ELECT. SERV.

CONSTRUCTION STDS.
MANUAL NO. 3
SECT. 36: SERV. UNGRND.

COMPUTER GENERATED DRAWING NOT TO BE HAND REVISED

DRAWN BY JDV	DATE 08.26.05	CHECKED BY	DATE
DISCIPLINE CODE		SCALE N.T.S.	
APPROVED			
MGR. George Murray	08.26.05	DATE	
MGR.		DATE	